MECHANICAL GENERAL LEGEND

DUCTWORK SYMBOLS

DESCRIPTION	SINGLE LINE	DOUBLE LINE
ACCESS DOOR	AD	AD
BACKDRAFT DAMPER	BDD	BDD
FIRE DAMPER	F	F
FLEXIBLE CONNECTION	FC	FC
MOTORIZED DAMPER	M	M
CONTROL DAMPER	CD M	CD M
VOLUME DAMPER, MANUAL	VD	VD
DUCT ELBOW WITH TURNING VANES		
DUCT SECTION – SUPPLY AIR		
DUCT SECTION – EXHAUST AIR		
DUCT SECTION – RETURN, OUTSIDE, OR RELIEF AIR		
DUCT, INCLINED DROP		
DUCT, INCLINED RISE		
FLEXIBLE DUCT – ROUND	8"ø	8"ø
DUCT TRANSITION	14/10 → 10/10	14/10 → 10/10
DUCT TRANSITION (SQUARE OR RECTANGULAR TO ROUND)	10/10 → 8"ø	12/12 → 8"ø
RECTANGULAR DUCT, SIZE IN INCHES, FIRST DIMENSION IS SIDE SHOWN (NET CLEAR INSIDE DIMENSION)	10/14	10/14
ROUND DUCT, DIAMETER IN INCHES (NET CLEAR INSIDE DIMENSION)	8"ø	8"ø
AIR FLOW IN DIRECTION OF ARROW		
45° BRANCH TAKE-OFFS		
CONICAL LATERAL BRANCH TAKE-OFFS		
CEILING SUPPLY DIFFUSERS		
CEILING RETURN GRILLE/REGISTER		
CEILING EXHAUST FAN (EF-_)		EF-_
CEILING EXHAUST GRILLE/REGISTER		
SIDEWALL SUPPLY GRILLE/REGISTER		
SIDEWALL RETURN/EXHAUST GRILLE/REGISTER		
EXTRACTOR		
DUCT TEE WITH SPLITTER DAMPER		
DOOR UNDERCUT	—UC→	—UC→
DOOR LOUVER	—L→	—L→

PIPING SYMBOLS

SYMBOL	DESCRIPTION
CHWS	CHILLED WATER SUPPLY
CHWR	CHILLED WATER RETURN
HWS	HOT WATER SUPPLY
HWR	HOT WATER RETURN
PCWS	PRIMARY CHILLED WATER SUPPLY
PCWR	PRIMARY CHILLED WATER RETURN
SCWS	SECONDARY CHILLED WATER SUPPLY
SCWR	SECONDARY CHILLED WATER RETURN
D	DRAIN
	DIRECTION OF PITCH (DOWN)
	FLUID FLOW DIRECTION
	SECTIONAL VALVE (SEE SPECS)
	GATE VALVE
	CHECK VALVE
	THROTTLING VALVE (SEE SPECS)
	GLOBE VALVE
	BUTTERFLY VALVE
	CALIBRATED BALANCING VALVE
	BALL VALVE
	PRESSURE REDUCING VALVE
	PRESSURE RELIEF OR SAFETY VALVE
	VACUUM RELIEF OR SAFETY VALVE
	ANGLE VALVE
S	SOLENOID VALVE
M	2-WAY MOTOR OPERATED CONTROL VALVE
M	3-WAY MOTOR OPERATED CONTROL VALVE
M	2-WAY CONTROL VALVE
M	3-WAY CONTROL VALVE
F	TRIPLE DUTY VALVE
	FLOW CONTROL VALVE
	PLUG VALVE
	SIGHT GLASS
	TEST COCK
	PLUGGED TEE
TFM	FLOW METER
	PRESSURE GAUGE WITH VENT COCK
	THERMOMETER
	THERMAL WELL WITH TEMPERATURE SENSOR
	STRAINER
	STRAINER WITH BLOWDOWN VALVE
	CONCENTRIC REDUCER
	ECCENTRIC REDUCER
	UNION
	FLEXIBLE PIPE CONNECTOR
	CAPPED PIPE/OUTLET
	PLUGGED PIPE/OUTLET
	AUTOMATIC AIR VENT
	VALVE AND BLIND FLANGE
	PIPE HEADER WITH BLIND FLANGE
	PIPE TURNING UP
	PIPE TURNING DOWN
	PIPE BRANCH BOTTOM CONNECTION
	PIPE BRANCH TOP CONNECTION
	PUMP (FOR WATER FLOW DIAGRAM ONLY)

MISCELLANEOUS SYMBOLS

- P — DUCT STATIC PRESSURE SENSOR
- SD — DUCT SMOKE DETECTOR
- CO_2 — CARBON DIOXIDE SENSOR
- NEW CONNECTION TO EXISTING
- H — HUMIDISTAT
- RH — RELATIVE HUMIDITY SENSOR
- T — THERMOSTAT OR TEMPERATURE SENSOR (MOUNT 48" AFF)
- T — DUCT TEMPERATURE SENSOR
- TC — TIME CLOCK
- F — FREEZESTAT
- DIFFUSER, GRILLE OR REGISTER MARK
- 200 — AIR FLOW (CFM); 12 X 8 — RECTANGULAR FACE SIZE (WHERE APPLICABLE)
- 01 / M2.01 — DIRECTION OF SECTION; IDENTIFYING NUMBER OR LETTER FOR SECTIONS. NUMBER OF REFERENCE DRAWING WHERE SECTION IS SHOWN.
- 01 / M2.01 — IDENTIFYING NUMBER OR LETTER FOR DETAILS. NUMBER OF REFERENCE DRAWING WHERE DETAIL IS SHOWN.
- ENLARGED DETAIL REFERENCE
- MATCHLINE
- LINE WITH HATCHING DESIGNATES DEMOLITION WORK

AIRFLOW DIAGRAM SYMBOLS

- C — COOLING COIL
- H C — HEATING COIL
- LOUVER
- BDD — BACKDRAFT DAMPER
- FD/SD — FIRE/SMOKE DAMPER
- AFMS — AIR FLOW MEASURING STATION
- M — MOTORIZED OPPOSED BLADE DAMPER
- M — MOTORIZED PARALLEL BLADE DAMPER
- FAN STARTER
- FAN
- FAN WITH ADJUSTABLE FREQUENCY MOTOR CONTROLLER

GENERAL ABBREVIATIONS

AAV	AUTOMATIC AIR VALVE	MAX	MAXIMUM
AFF	ABOVE FINISHED FLOOR	MFR	MANUFACTURER
AFMS	AIR FLOW MEASURING STATION	MIN	MINIMUM
AMB	AMBIENT	MVD	MOTORIZED VOLUME DAMPER
APD	AIR PRESSURE DROP	MW	MAKE UP WATER
BD	BLOWDOWN		
BF	BLIND FLANGE	NC	NORMALLY CLOSED
BFP	BACKFLOW PREVENTER	NK	NECK
BFV	BUTTERFLY VALVE	NO	NORMALLY OPEN OR NUMBER
BHP	BRAKE HORSEPOWER	NTS	NOT TO SCALE
BLV	BALANCING VALVE		
BOD	BOTTOM OF DUCT	OA	OUTSIDE AIR
BOP	BOTTOM OF PIPE	OBD	OPPOSED BLADE DAMPER
BOS	BOTTOM OF STEEL		
BV	BALL VALVE		
CAP	CAPACITY	PD	PRESSURE DROP
CCMS	CENTRAL CONTROL MONITORING SYSTEM	PH	PHASE
CENT	CENTRIFUGAL	PI	PRESSURE INDICATOR
CMBST	COMBUSTION AIR	PRV	PRESSURE RELIEF VAVLE
CL	CENTERLINE	PS	PRESSURE SENSOR
CV	CONTROL VALVE OR CONSTANT VOLUME	PSV	PRESSURE SAFETY VALVE
CHWS	CHILLED WATER SUPPLY	PTRV	PRESSURE TEMPERATURE RELIEF VALVE
CHWR	CHILLED WATER RETURN	PV	PLUG VALVE
		PCW	PRIMARY CHILLED WATER
D	DIFFUSER OR DAMPER	PCWS	PRIMARY CHILLED WATER SUPPLY
DB	DRY BULB	PCWR	PRIMARY CHILLED WATER RETURN
DEG	DEGREES	PCWP	PRIMARY CHILLED WATER PUMP
DIA	DIAMETER		
DN	DOWN	RED	REDUCER
DX	DIRECT EXPANSION	REG	REGISTER
		RH	RELATIVE HUMIDITY
		RPM	REVOLUTIONS PER MINUTE
EAT	ENTERING AIR TEMPERATURE	SA	SUPPLY AIR
EDB	ENTERING DRYBULB TEMPERATURE	SENS	SENSIBLE
EFF	EFFICIENCY	SL	SOUND LINING
ENT	ENTERING	SD	SMOKE DETECTOR
ESP	EXTERNAL STATIC PRESSURE	SOV	SOLENOID OPERATED VALVE OR SHUT-OFF VALVE
EWB	ENTERING WET BULB		
EWT	ENTERING WATER TEMPERATURE	SP	STATIC PRESSURE
		SS	STAINLESS STEEL
FCV	FLOW CONTROL VALVE	SCW	SECONDARY CHILLED WATER
FLA	FULL LOAD AMP	SCWS	SECONDARY CHILLED WATER SUPPLY
FLEX	FLEXIBLE	SCWR	SECONDARY CHILLED WATER RETURN
FM	FLOW METER	SCWP	SECONDARY CHILLED WATER PUMP
FWL	FIXED WALL LOUVER		
		TOD	TOP OF DUCT
		TOP	TOP OF PIPE
GR	GRILLE	TOS	TOP OF STEEL
GV	GATE VALVE	TS	TEMPERATURE SENSOR
		TSTAT	THERMOSTAT
		TSP	TOTAL STATIC PRESSURE
HZ	CYCLES PER SECOND (HERTZ)	UNO	UNLESS NOTED OTHERWISE
		VEL	VELOCITY
kW	KILOWATT	VFD	VARIABLE FREQUENCY DRIVE
		VTR	VENT THROUGH ROOF
LAT	LEAVING AIR TEMPERATURE		
LDB	LEAVING DRYBULB TEMPERATURE	WB	WET BULB
LWT	LEAVING WATER TEMPERATURE	WPD	WATER PRESSURE DROP
		WTR	WATER
		WxHxL	WIDTH BY HEIGHT BY LENGTH

EQUIPMENT ABBREVIATIONS

AHU	AIR HANDLING UNIT	FCCU	FAN COIL CONDENSING UNIT
ACU	AIR CONDENSING UNIT	FPB	FAN POWER BOX
ACCU	AIR COOLED CONDENSING UNIT	GFUH	GAS FIRED UNIT HEATER
AG	ABOVE GROUNG	HC	HOT WATER HEATING COIL
AS	AIR SEPARATOR	HWP	HOT WATER PUMP
B	BOILER	OAH	OUTSIDE AIR HOOD
BCU	BLOWER COIL UNIT	L	LOUVER
CC	COOLING COIL	P	PUMP
CF	CHEMICAL FEEDER	PP	PRIMARY PUMP
CH	CHILLER	PTAC	PACKAGE TERMINAL AIR CONDITIONING
CP	CONDENSOR PUMP	RH	RELIEF HOOD
CT	COOLING TOWER	RHEF	RELIEF HOOD EXHAUST FAN
CWP	CHILLED WATER PUMP	RTU	ROOF TOP UNIT
EDH	ELECTRIC DUCT HEATER	SDB	SINGLE DUCT BOX
DC	DUST COLLECTOR	SP	SECONDARY PUMP
EF	EXHAUST FAN	ST	CHILLED WATER STORAGE TANK
EH	ELECTRIC HEATER	UG	UNDER GROUND
ET	EXPANSION TANK	VAV	VARIABLE AIR VOLUME BOX
F	FILTER	VFD	VARIABLE FREQUENCY DRIVE
FCU	FAN COIL UNIT		

GENERAL MECHANICAL NOTES

(1) INFORMATION ON THIS PLAN HAS BEEN OBTAINED FROM EXISTING DRAWINGS AND SITE SURVEY. CONTRACTOR SHALL FIELD VERIFY EXISTING CONDITIONS PRIOR TO COMMENCING WORK. ANY DISCREPANCIES BETWEEN EXISTING CONDITIONS AND CONSTRUCTION DOCUMENTS SHALL BE REPORTED IMMEDIATELY TO THE ENGINEER AND/OR ARCHITECT.

(2) THE CONTRACTOR IS FULLY RESPONSIBLE FOR PERFORMING THE WORK IN FULL COMPLIANCE WITH ALL APPLICABLE LOCAL, STATE, AND FEDERAL CODES UNDER THIS SECTION OF THE CONTRACT. IF THE CONTRACTOR DETERMINES THAT THE CONTRACT DOCUMENTS AND PLANS ARE NOT IN COMPLIANCE WITH THE APPLICABLE LOCAL CODES, HE SHALL INFORM THE ARCHITECT PRIOR TO CONSTRUCTION START FOR DIRECTION. FAILURE TO DO SO SHALL NOT RELIEVE THE CONTRACTOR OF HIS RESPONSIBILITY TO MEET APPLICABLE LOCAL CODES, AND REWORK SHALL BE AT CONTRACTOR'S EXPENSE.

(3) CONTRACTOR SHALL HANG AND INSTALL ALL DUCTWORK TIGHT WITH THE BUILDING STRUCTURE TO ACCOMMODATE NEW CEILINGS. CONTRACTOR SHALL COORDINATE ALL INSTALLATION WORK WITH ARCHITECTURAL AND ELECTRICAL DESIGN. ALL DUCTWORK SHALL BE MODIFIED AS NECESSARY AND REQUIRED TO FIT AROUND BUILDING STRUCTURES, ARCHITECTURAL BUILD-OUT AND ELECTRICAL CABLE TRAY INSTALLATIONS. MECHANICAL CONTRACTOR SHALL FAMILIARIZE HIMSELF WITH THE WORK SCOPE OF OTHER TRADES AND PARTICIPATE IN COORDINATING ALL CONSTRUCTION EFFORTS.

(4) CONTRACTOR SHALL INSTALL ALL EXHAUST SYSTEMS, INCLUDING FANS AND EXHAUST DUCTS. PROVIDE COMPLETE NEW SYSTEMS AS INDICATED.

(5) CONTRACTOR SHALL PROVIDE ALL CEILING DIFFUSERS AS SHOWN. CONNECT EACH DIFFUSER TO THE MAIN DISTRIBUTION DUCT WITH A FLEX-DUCT SECTION; CONNECTIONS SHALL BE COMPLETED IN ACCORDANCE WITH THE DETAIL. EACH FLEX-DUCT CONNECTION SHALL INCLUDE A BUTTERFLY DAMPER TO BE INSTALLED AT THE TRUNK DUCT.

(6) CONTRACTOR SHALL PROVIDE ALL DUCTWORK REQUIRED TO COMPLETE THE HVAC SYSTEM. TIE IN BRANCH DUCTS TO MAIN DUCTS WITH SHEET METAL FLANGES. FLANGE CONNECTION SHALL BE FASTENED WITH CRIMPED SHEET METAL STRIPS AND SEALED WITH SILICONE CAULK.

(7) CONTRACTOR SHALL SUPPLY AND INSTALL FIRE DAMPERS AND ACCESS DOORS IN THE HORIZONTAL DUCTS WHERE THEY PENETRATE FIRE BARRIERS.

(8) CONTRACTOR SHALL PROVIDE FIRE DAMPERS IN ALL DIFFUSERS AND GRILLES LOCATED IN FIRE RATED CEILINGS. ALL HALLWAY DIFFUSERS AND GRILLES SHALL BE INSTALLED WITH FIRE DAMPERS. ALL DIFFUSERS AND GRILLES SHOWN WITH A CIRCLED "F" SHALL BE EQUIPPED WITH FIRE DAMPERS.

(9) ALL OPENINGS CUT IN MASONRY AND PLASTER WALLS OR CONCRETE FLOORS SHALL BE CORE DRILLED OR SAWED WHEN POSSIBLE. CONTRACTOR SHALL CHECK BUILDING CONSTRUCTION BEFORE MAKING PENETRATIONS TO AVOID CUTTING THROUGH STRUCTURAL BEAMS AND REINFORCING. CONTRACTOR SHALL INFORM THE ENGINEER IF REINFORCING IS CUT OR DAMAGED WHILE MAKING OPENINGS. CONTRACTOR SHALL REINFORCE ALL OPENINGS AS REQUIRED BY DRAWINGS AND SPECIFICATIONS. PATCH AND SEAL OPENINGS WITH 6000 PSI CEMENT GROUT. INSTALL DECORATIVE TRIM (EQUIPMENT FLANGES, FRAMING OR ESCUTCHEONS) AROUND OPENINGS IN FINISHED AREAS. COORDINATE ALL CUTTING AND PATCHING WITH THE OTHER TRADES.

(10) ON ANY WORK SHOWN ON MECHANICAL DRAWINGS REQUIRING DEMOLITION OF EXISTING OR NEW BUILDING STRUCTURES AND FINISHES, IT SHALL BE THE RESPONSIBILITY OF THE CONTRACTOR TO COMPLETE THE NECESSARY DEMOLITION. CONTRACTOR SHALL PATCH AND REPAIR ALL DEMOLITION WORK. PATCHING SHALL BE COMPLETED WITH THE SAME MATERIALS AS THE SURROUNDING AREAS, OR WITH ARCHITECT-APPROVED PATCHING MATERIALS. REPAIRS SHALL BE COMPLETED ACCORDING TO ARCHITECTURAL SPECIFICATIONS. ALL REFINISHING SHALL BE APPROVED BY THE ARCHITECT.

(11) CONTRACTOR SHALL BE RESPONSIBLE FOR COMPLETING THE INSTALLATION OF THE AIR DISTRIBUTION SYSTEM SHOWN. DUCTWORK, DUCT ACCESSORIES AND CONTROLS SHOWN AND REQUIRED SHALL BE SUPPLIED AND INSTALLED. ALL INSTALLATION WORK SHALL BE DONE IN ACCORDANCE WITH APPLICABLE CODES, INCLUDING NFPA 90A AND 90B.

(12) CONTRACTOR SHALL BALANCE ALL AIR DISTRIBUTION SYSTEMS TO ACHIEVE THE AIR VOLUME REQUIREMENTS INDICATED. BALANCING SHALL INCLUDE ADJUSTMENT OF ALL MANUAL VOLUME DAMPERS, SPLITTER DAMPERS, ZONE DAMPERS (IF REQUIRED), BUTTERFLY DAMPERS AND INDIVIDUAL DIFFUSER VOLUME DAMPERS (FINAL BALANCING ONLY). CONTRACTOR SHALL SUPPLY THE ENGINEER WITH A COMPLETE BALANCING REPORT WHICH INCLUDES VOLUME, ROOM REFERENCE AND ZONE VOLUME TOTALS.

(13) MOUNT ALL THERMOSTATS (SENSORS) 48" ABOVE THE FINISHED FLOOR LEVEL UNLESS NOTED OTHERWISE THERMOSTATS SHOWN SHALL BE IN CONTROL OF THE ZONE SYSTEM WHICH IS SUPPLYING AIR TO THE AREA WHERE THE THERMOSTAT IS LOCATED. CONTRACTOR SHALL COORDINATE THE FINAL LOCATION OF EACH THERMOSTAT WITH THE ROOM FINISHES AND USES. CONTRACTOR SHALL SUPPLY AND INSTALL ALL CONTROL VOLTAGE WIRING AND CONDUIT FOR THERMOSTAT (DDC CONTROL) INSTALLATION.

(14) CONTRACTOR SHALL COORDINATE THE FINAL LOCATIONS OF ALL CEILING DIFFUSERS WITH LIGHTING INSTALLATIONS AND ARCHITECTURAL REFLECTED CEILING PLANS. MOVE THE DIFFUSER LOCATIONS IF REQUIRED TO AVOID OBSTRUCTIONS FROM DUCTWORK AND LIGHT FIXTURES. COORDINATE RELOCATION WITH ENGINEER.

(15) CONTRACTOR SHALL INSTALL NEW REFRIGERANT PIPING FLUSH WITH THE BUILDING STRUCTURE AND MECHANICAL ROOM BOUNDARIES AS SHOWN. CONTRACTOR SHALL COORDINATE ALL INSTALLATION WORK WITH DUCTS AND ELECTRICAL CONDUIT. MECHANICAL CONTRACTOR SHALL FAMILIARIZE HIMSELF WITH THE WORK SCOPE OF OTHER TRADES AND PARTICIPATE IN COORDINATING ALL CONSTRUCTION EFFORTS.

(16) ALL PIPING SHALL BE INSULATED AND JACKETED. REFER TO THE SPECIFICATIONS. CONDENSER COILS ARE TO BE COATED IN ACCORDANCE WITH THE SPECIFICATIONS.

(17) VERIFY THE LOCATION OF ALL WALLS, PARTITIONS, DOORS, CABINETS, AND CEILINGS FROM ACTUAL FIELD MEASUREMENTS.

(18) PROVIDE SMOKE DETECTOR AND SHUTDOWN CONTROLS ON AIR HANDLERS AND SUPPLY FANS. SMOKE DETECTORS SHALL BE PROVIDED, INSTALLED AND WIRED FOR SHUT DOWN BY DIVISION 16. PROVIDE BOTH SUPPLY AND RETURN SIDE DEVICES.

HALFF
5000 WEST MILITARY, SUITE 100
McALLEN, TEXAS 78503
TEL (956) 664-0286
FAX (956) 664-0282
Halff Associates firm registration number is 312

100% PRICING SET

REVISIONS

The Reese
Phase I
202 S. 1st. Street
Harlingen, TX

MECHANICAL
GENERAL LEGEND

MEGAMORPHOSIS
- ARCHITECTURE & INTERIOR DESIGN
1409 N. STUART PLACE RD., SUITE D
PHONE #(956) 428-1779 FAX # (956) 425-5886

PROJECT # 27074

MAR. 26, 2010

M-0.1

GENERAL NOTES: ( )

(A) REFER TO SHEET MXXX FOR GENERAL MECHANICAL NOTES.

KEY NOTES:

1 TERMINATE STUB OUT FOR FUTURE CONNECTIONS WITH BUTTERFLY VALVE (OR BALL VALVE FOR PIPE <2"ø) AND BLIND FLANGE.

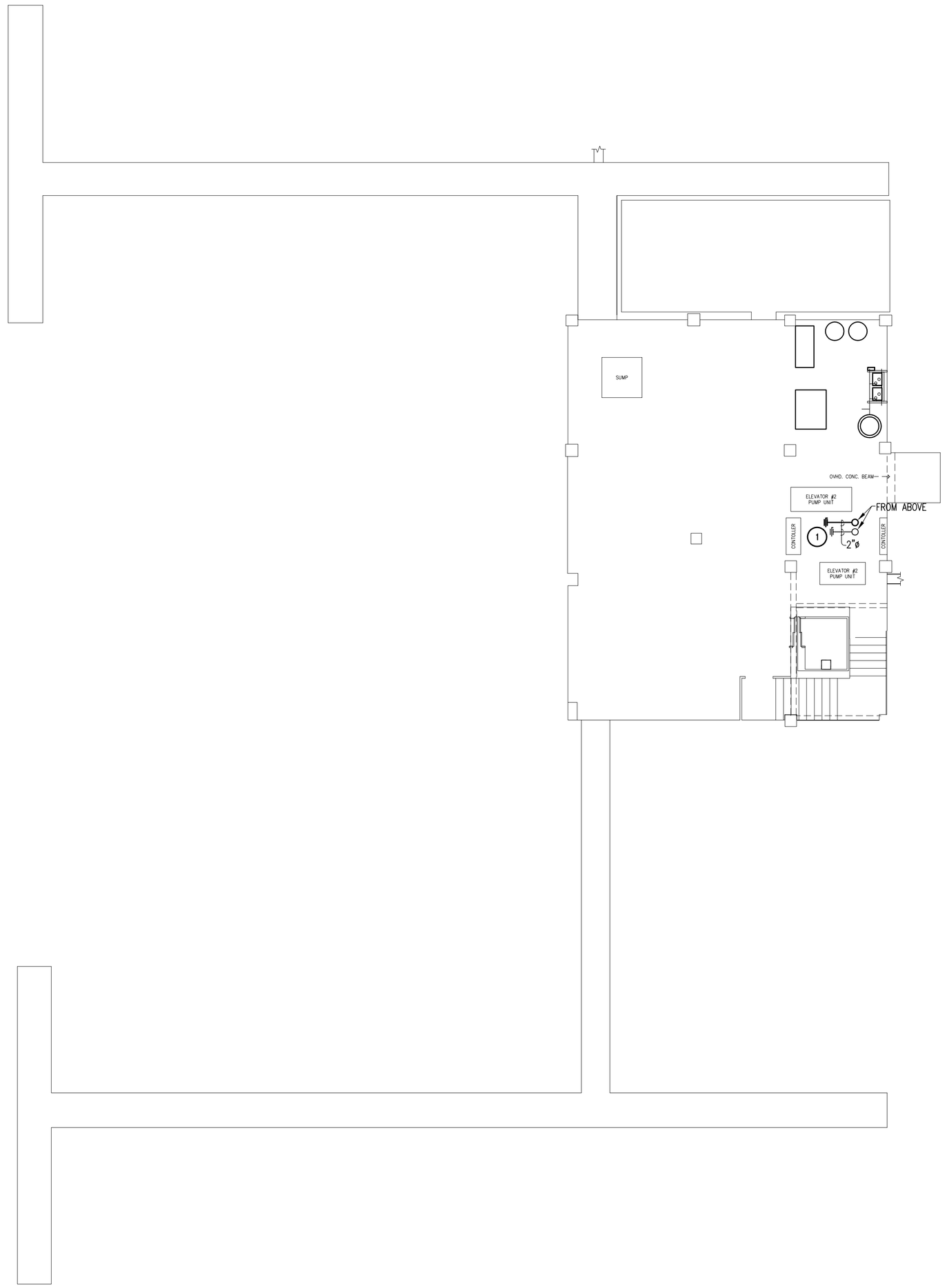

01 BASEMENT – MECHANICAL PLAN

SCALE: 1/8" = 1'-0"

HALFF

5000 WEST MILITARY, SUITE 100
McALLEN, TEXAS 78503
TEL (956) 664-0286
FAX (956) 664-0282

Halff Associates firm registration number is 312

100% PRICING SET

REVISIONS

The Reese
Phase I
202 S. 1st. Street
Harlingen, TX

BASEMENT
MECHANICAL PLAN

MEGAMORPHOSIS
- ARCHITECTURE & INTERIOR DESIGN
1409 N. STUART PLACE RD., SUITE D
PHONE #(956) 428-1779 FAX # (956) 425-5888

PROJECT # 27074

MAR. 26, 2010

M-1.0

GENERAL NOTES: ( )

(A) REFER TO SHEET M-0.1 FOR GENERAL MECHANICAL NOTES.

(B) MOUNT LOUVERS 11'-0" A.F.F. TO TOP OF FRAME.

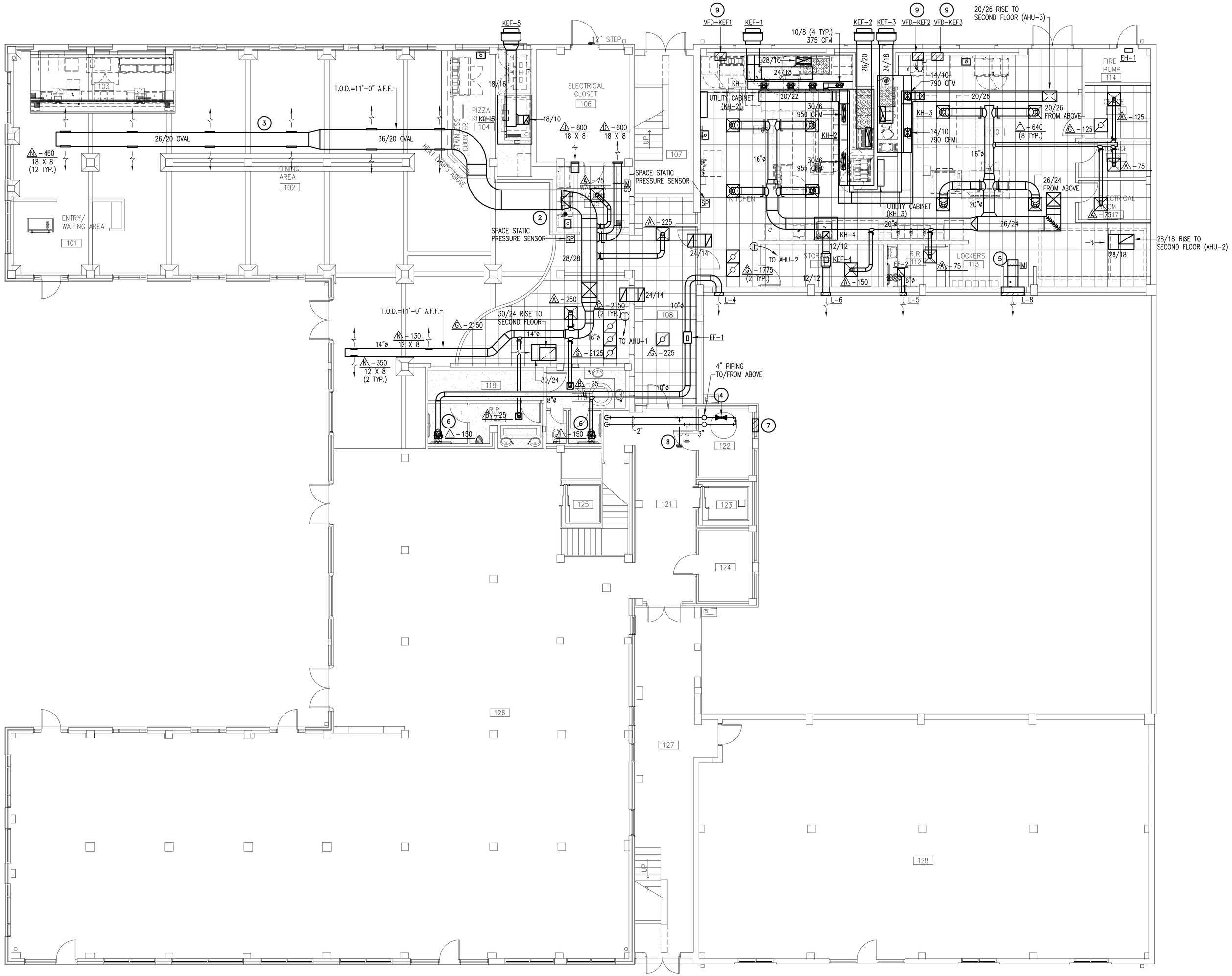

KEY NOTES:

1. MECHANICAL CONTRACTOR SHALL RUN WELDED STEEL DUCT WITH FIRE-WRAP INSULATION FROM KITCHEN HOOD TO KEF IN ACCORDANCE WITH REQUIREMENTS OF I.M.C.
2. PROVIDE ESCUTCHEONS ON EXPOSED DUCT WALL PENETRATION. EXPOSED DUCT SHALL BE DOUBLE WALL (BOTH ROUND AND RECTANGULAR) AND PHOSPHATIZED FOR FINAL PAINTING. EXPOSED INSULATION SHALL NOT BE ACCEPTABLE.
3. EXPOSED DUCT SHALL BE DOUBLE WALL OVAL AND PHOSPHATIZED FOR FINAL PAINTING. EXPOSED INSULATION SHALL NOT BE ACCEPTABLE.
4. 3" SPRING RETURN GLOBE VALVE, NORMALLY OPEN FOR SYSTEM BYPASS.
5. MOTORIZED CONTORL DAMPER FOR BUILDING RELIEF.
6. PROVIDE AND INSTALL OPPOSED BLADE BALANCING DAMPER IN DUCT RISE ACCESSIBLE BY REMOVING GRILLE.
7. REPLACE EXISTING LOUVER WITH NEW LOUVER EQUAL TO RUSKIN MODEL EME520DD. LOUVER SHALL BE 24" WIDE X 72" TALL. FINISH SHALL BE MILL ALUMINUM. TYPICAL FOR FLOORS 1 THRU 6. FIELD VERIFY EXACT LOCATION.
8. TERMINATE STUB OUT FOR FUTURE CONNECTIONS WITH BUTTERFLY VALVE (OR BALL VALVE FOR PIPE <2"ø) AND BLIND FLANGE.
9. VFD SHALL BE PROVIDED BY MECHANICAL CONTRACTOR AND WIRED BY ELECTRICAL CONTRACTOR. MOUNT VFD ABOVE CEILING (NO MORE THAN 2'-0" ABOVE FINISHED CEILING) IN CLOSE PROXIMITY TO EXHAUST FAN. ENSURE VFD HAS SUPPLIANT ACCESS.

01 FIRST FLOOR – MECHANICAL PLAN

SCALE: 1/8" = 1'-0"

HALFF
5000 WEST MILITARY, SUITE 100
McALLEN, TEXAS 78503
TEL (956) 664-0286
FAX (956) 664-0282
Halff Associates firm registration number is 312

100% PRICING SET

REVISIONS

The Reese
Phase I
202 S. 1st. Street
Harlingen, TX

FIRST FLOOR
MECHANICAL PLAN

MEGAMORPHOSIS
· ARCHITECTURE & INTERIOR DESIGN
1409 N. STUART PLACE RD., SUITE D
PHONE #(956) 428-1779 FAX # (956) 425-5886

PROJECT # 27074

MAR. 26, 2010

M-1.1

GENERAL NOTES: ( )

(A) REFER TO SHEET M-0.1 FOR GENERAL MECHANICAL NOTES.

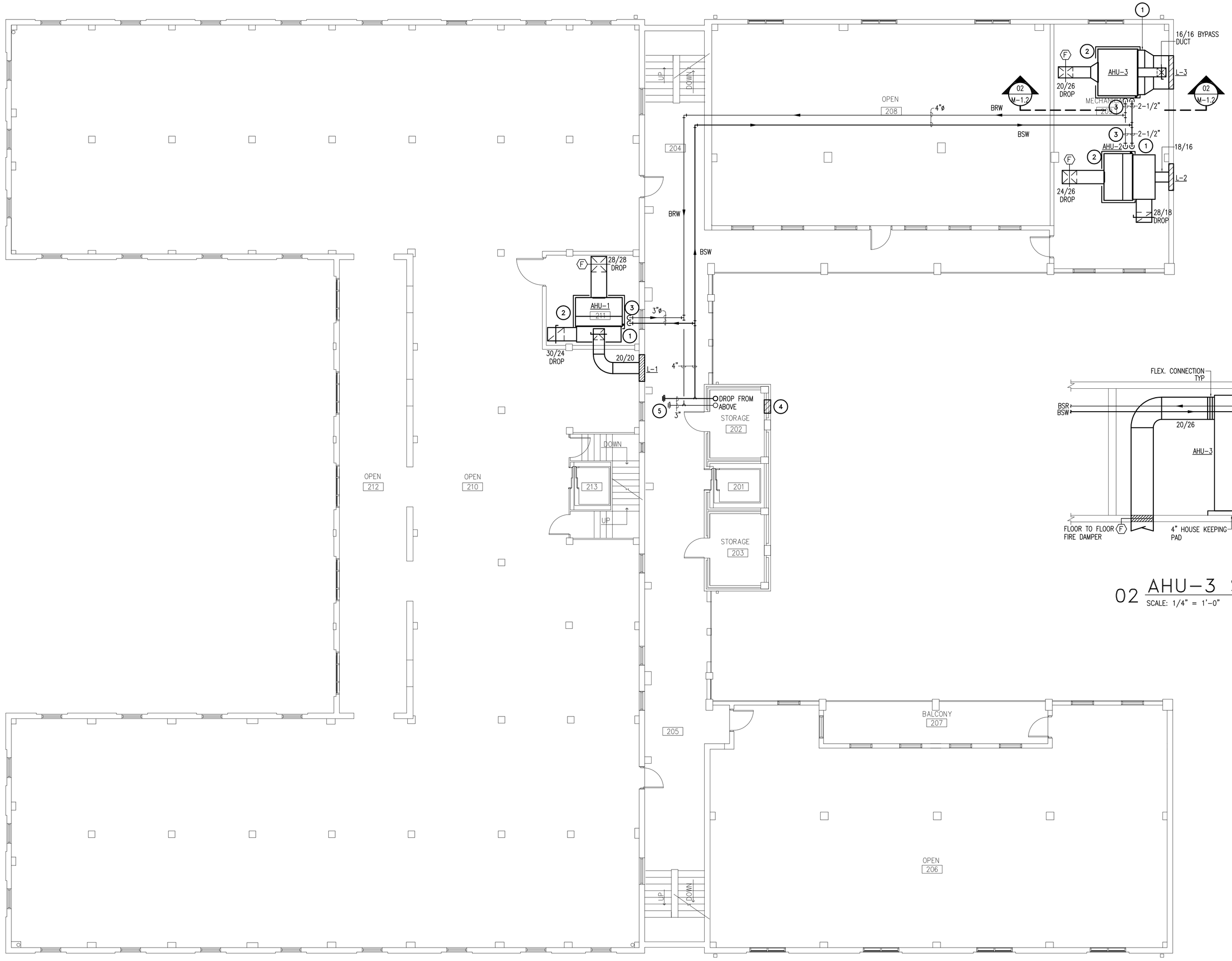

KEY NOTES:

1. PROVIDE RETURN AIR PLENUM OF EQUAL SIZE OF UNIT OPENING.
2. FURNISH AND INSTALL 4 INCH HIGH HOUSE KEEPING PAD FOR AHU. CONCRETE PAD SHALL EXTEND 6 INCHES BEYOND EVERY AHU EDGE.
3. PROVIDE ISOLATION VALVES AT CONDENSER WATER CONNECTION TO AHU.
4. REPLACE EXISTING LOUVER WITH NEW LOUVER EQUAL TO RUSKIN MODEL EME520DD. LOUVER SHALL BE 24" WIDE X 72" TALL. FINISH SHALL BE MILL ALUMINUM. TYPICAL FOR FLOORS 1 THRU 6. FIELD VERIFY EXACT LOCATION.
5. TERMINATE STUB OUT FOR FUTURE CONNECTIONS WITH BUTTERFLY VALVE (OR BALL VALVE FOR PIPE <2"ø) AND BLIND FLANGE.

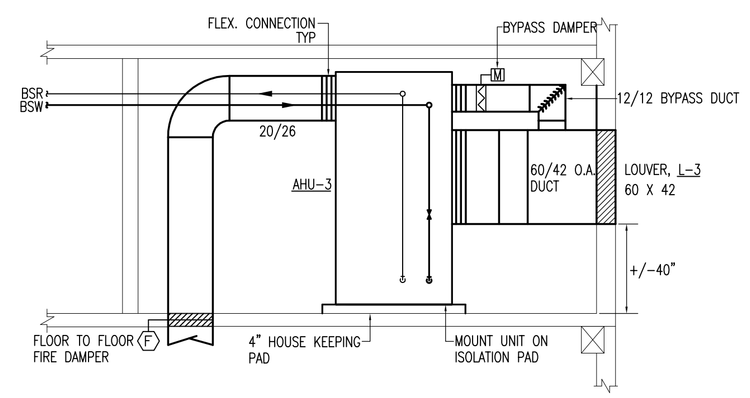

02 AHU-3 SECTION
SCALE: 1/4" = 1'-0"

01 SECOND FLOOR – MECHANICAL PLAN
SCALE: 1/8" = 1'-0"

N

100% PRICING SET

HALFF
5000 WEST MILITARY, SUITE 100
McALLEN, TEXAS 78503
TEL (956) 664-0286
FAX (956) 664-0282
Halff Associates firm registration number is 312

REVISIONS

The Reese
Phase I
202 S. 1st. Street
Harlingen, TX

SECOND FLOOR
MECHANICAL PLAN

MEGAMORPHOSIS
- ARCHITECTURE & INTERIOR DESIGN
1409 N. STUART PLACE RD., SUITE D
PHONE #(956) 428-1779 FAX # (956) 425-5886

PROJECT # 27074

MAR. 26, 2010

M-1.2

GENERAL NOTES: ( )

(A) REFER TO SHEET M-0.1 FOR GENERAL MECHANICAL NOTES.

KEY NOTES:

1. AIR SEPARATOR, AS-1, SHALL BE EQUAL TO BELL & GOSSET# RL-8F.
2. EXPANSION TANK. ET-1, SHALL BE EQUAL TO BELL & GOSSET# B-35LA. FLOOR MOUNT ON 4" HIGH HOUSE KEEPING PAD.
3. THREE SOCK CHEMICAL FEEDER MOUNTED ON 4" HOUSE KEEPING PAD. REFER TO DETAIL 04/M3.2.
4. PROVIDE TOWER SHUT-OFF AND AUTO ISOLATION VALVES IN BRANCH TAP RISER.
5. FURNISH AND INSTALL CONCRETE INERTIA BASE WITH SPRING ISOLATORS FOR PUMP.
6. VFD(S) SHALL BE PROVIDED BY MECHANICAL CONTRACTOR AND WIRED BY ELECTRICAL CONTRACTOR. VFD'S SHALL MEET ALL CLEARANCES AS RECOMMENDED BY MANUFACTURER.
7. 1-1/2" MAKE-UP WATER LINE. REFER TO PLUMBING DRAWINGS FOR CONTINUATION.
8. TERMINATE STUB OUT FOR FUTURE CONNECTIONS WITH BUTTERFLY VALVE (OR BALL VALVE FOR PIPE <2"ø) AND BLIND FLANGE.
9. REPLACE EXISTING LOUVER WITH NEW LOUVER EQUAL TO RUSKIN MODEL EME520DD. LOUVER SHALL BE 24" WIDE X 72" TALL. FINISH SHALL BE MILL ALUMINUM. TYPICAL FOR FLOORS 1 THRU 6. FIELD VERIFY EXACT LOCATION.
10. FURNISH AND INSTALL TURBINE ENERGY FLOW METER WITH REPORTING CAPABILITY TO DDC.

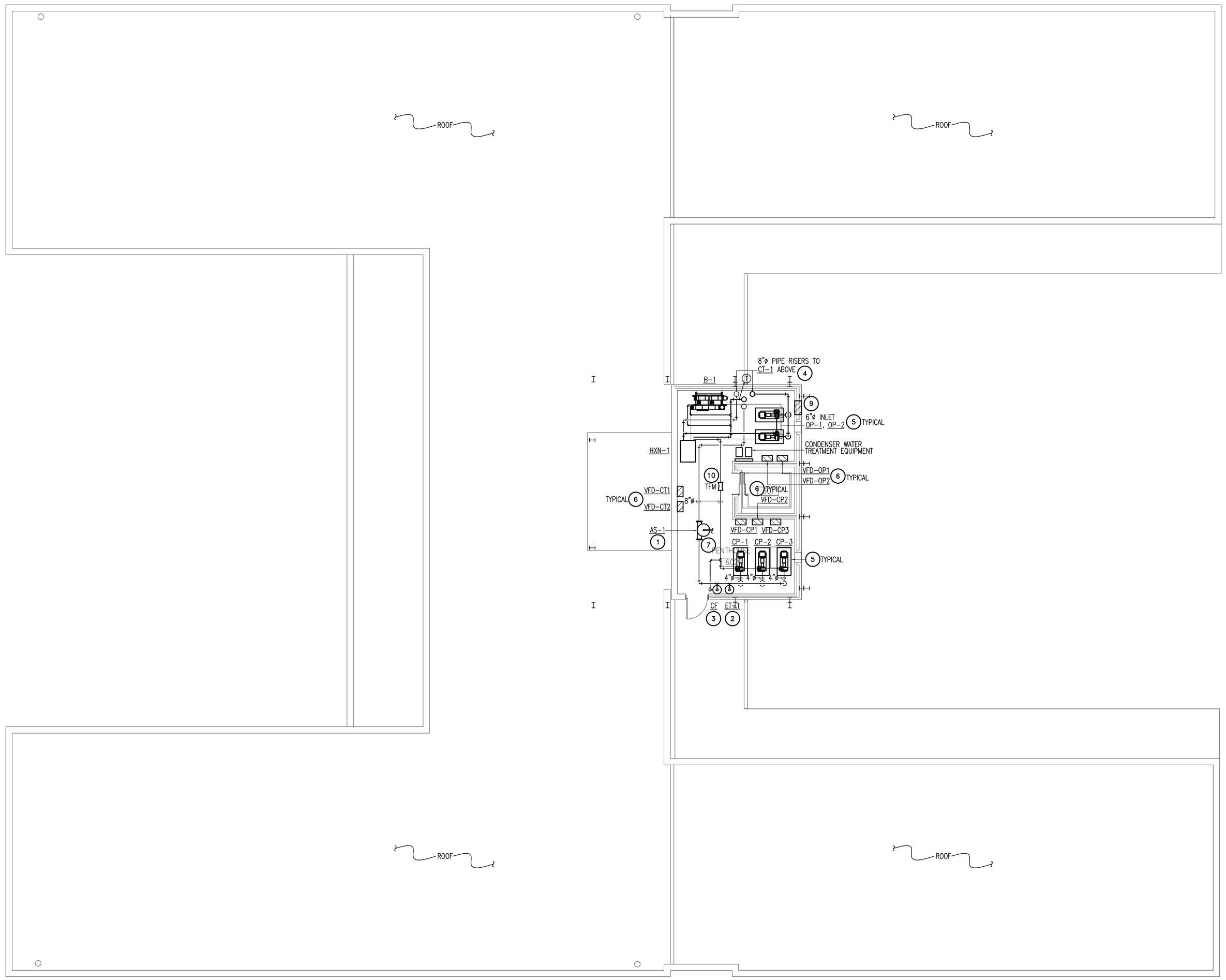

01 PENTHOUSE – MECHANICAL PLAN

SCALE: 1/8" = 1'-0"

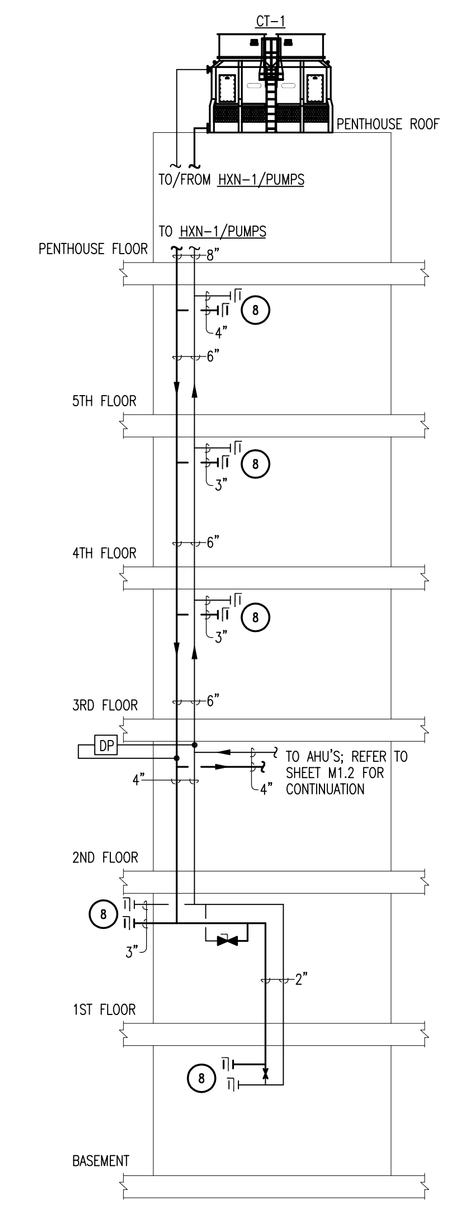

02 MECHANICAL RISER SCHEMATIC DIAGRAM

SCALE: NTS

HALFF
5000 WEST MILITARY, SUITE 100
McALLEN, TEXAS 78503
TEL (956) 664-0286
FAX (956) 664-0282
Halff Associates firm registration number is 312

100% PRICING SET

REVISIONS

The Reese
Phase I
202 S. 1st. Street
Harlingen, TX

PENTHOUSE
MECHANICAL PLAN

MEGAMORPHOSIS
· ARCHITECTURE & INTERIOR DESIGN
1409 N. STUART PLACE RD., SUITE D
PHONE #(956) 428-1779 FAX # (956) 425-5886

PROJECT # 27074

MAR. 26, 2010

M-1.6

GENERAL NOTES: ( )

(A) REFER TO SHEET M0.1 FOR GENERAL MECHANICAL NOTES.

KEY NOTES:

1 XXXXXX

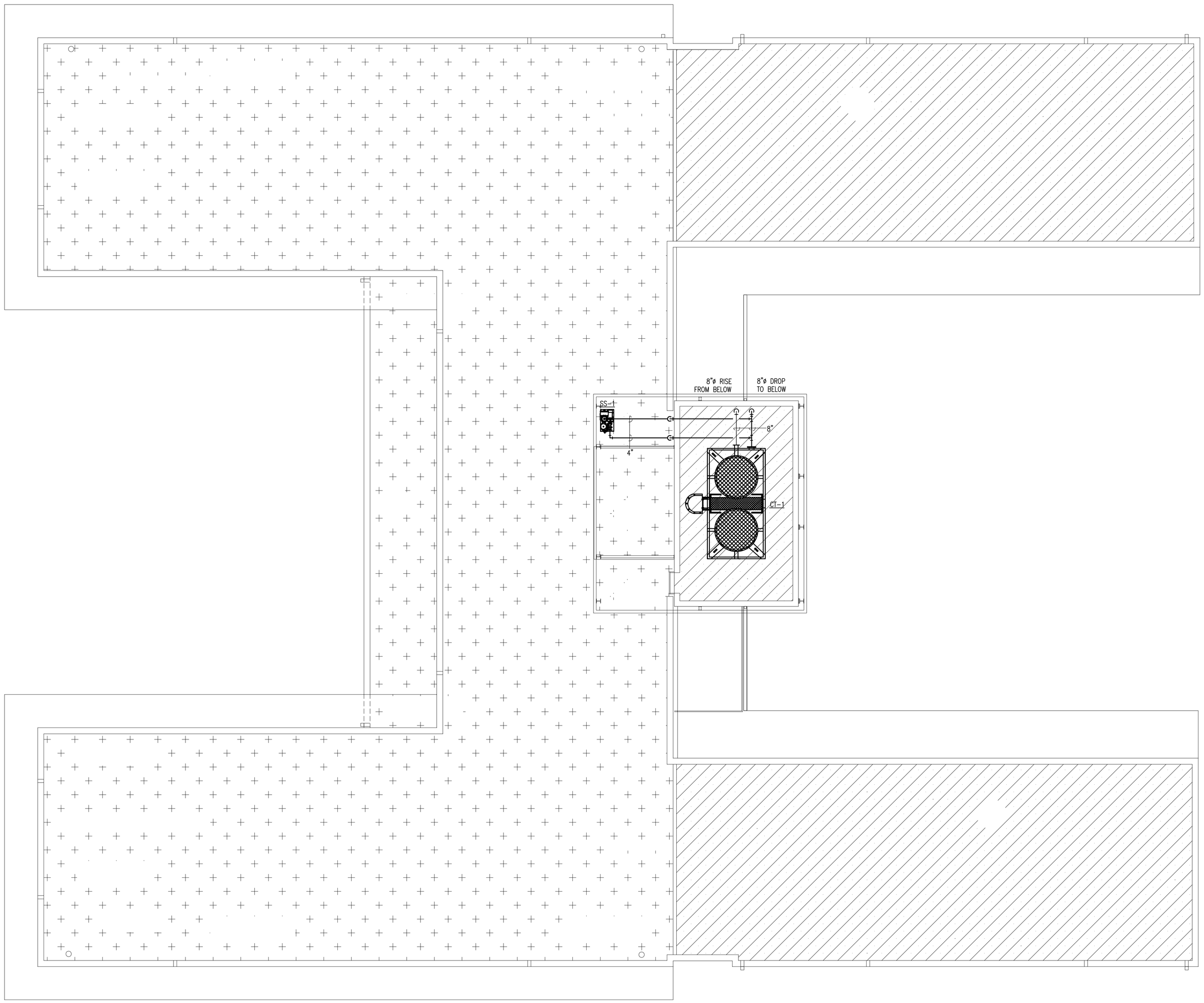

01 ROOF – MECHANICAL PLAN

SCALE: 1/8" = 1'-0"

N

HALFF

5000 WEST MILITARY, SUITE 100
McALLEN, TEXAS 78503
TEL (956) 664-0286
FAX (956) 664-0282

Halff Associates firm registration number is 312

100% PRICING SET

REVISIONS

The Reese
Phase I
202 S. 1st. Street
Harlingen, TX

ROOF
MECHANICAL PLAN

MEGAMORPHOSIS
• ARCHITECTURE & INTERIOR DESIGN
1400 N. STUART PLACE RD., SUITE D
PHONE #(956) 428-1779 FAX # (956) 425-5886

PROJECT # 27074

MAR. 26, 2010

M-1.7

KITCHEN HOOD SCHEDULE

HOOD NO.	MANUFACTURER MODEL	LENGTH	WIDTH	HEIGHT	MAX. COOKING TEMP.	EXHAUST PLENUM		SUPPLY PLENUM		HOOD CONSTRUCTION	HOOD TYPE	FILTER(S)	LIGHT(S)		HOOD WEIGHT	NOTES
						TOTAL EXH. CFM	S.P. IN WG.	TOTAL SUPPLY CFM	S.P. IN WG.		WALL CANOPY	TYPE	QTY.	TYPE		
KH-1	GREENHECK GHEW	180	48	24	600°F	3000	0.4"	1500	0.04"	18 GA TYPE 430 SS	TYPE I	SS BAFFLE	5	INCANDESCENT LIGHT	525 LBS.	1,3,4
KH-2	GREENHECK GHEW	176	48	24	600°F	3670	0.4"	1765	0.07"	18 GA TYPE 430 SS	TYPE I	SS BAFFLE	5	INCANDESCENT LIGHT	515 LBS.	2,3,4
KH-3	GREENHECK GHEW	140	48	24	600°F	2920	0.4"	1340	0.06"	18 GA TYPE 430 SS	TYPE I	SS BAFFLE	4	INCANDESCENT LIGHT	410 LBS.	2,3,4
KH-4	GREENHECK GD2	42	42	24	600°F	525	0.4"	N/A	N/A	18 GA TYPE 430 SS	TYPE II	NONE	–	NONE	168 LBS.	–
KH-5	GREENHECK GHEW	90	63	24	600°F	1845	0.5"	N/A	N/A	18 GA TYPE 430 SS	TYPE II	ALUMINUM MESH	–	NONE	310 LBS.	–

NOTES:
1. PROVIDE HOOD WITH INTEGRAL 12" UTILITY CABINET AND CONTROL PANEL (SWITCH) FOR LIGHTS AND EXHAUST FAN.
2. PROVIDE HOOD WITH REMOTE WALL-MOUNTED 12" UTILITY CABINET AND CONTROL PANEL (SWITCH) FOR LIGHTS AND EXHAUST FANS.
3. PROVIDE FACTORY PRE-PIPED FIRE PROTECTION SYSTEM. SYSTEM SHALL BE A WET CHEMICAL SYSTEM EQUAL TO ANSUL R-102. SYSTEM SHALL PROTECT ALL APPLIANCES. THE CONTROL PANEL AND STORAGE TANK SHALL BE PROVIDED IN UTILITY CABINET.
4. PROVIDE HOOD WITH "GREASE GRABBER" FILTRATION SYSTEM.
5. XXX

BOILER SCHEDULE

DESIGNATION	LOCATION	BURNER FUEL	BTU INPUT (MBH)	EFFICIENCY CAPABILITY	FUEL CONSUMPTION (MBH)	MANUFACTURER	MODEL NUMBER NUMBER	OPERATING PRESSURE (PSIG)	GPM	E.W.T. (°F)	L.W.T. (°F)	VOLT\Ø\HZ
B-1	PENTHOUSE	NAT. GAS	1,000	99%	999	HAMILTON	DUO-1000	160	18/44	65	105	208/1ø

NOTES
1. REFERENCE ELECTRICAL DRAWINGS FOR ELECTRICAL DATA.
2. PROVIDE MANUFACTURER'S CIRCULATING PUMP FOR EACH BOILER.
3. PROVIDE AL29 4C CATEGORY 2-4 VENTING AS REQUIRED BY MANUFACTURER.
4. USE GAS REGULATOR SUPPLIED BY BOILER MANUFACTURER TO REDUCE GAS PRESSURE FROM 2 PSI TO MANUFACTURER REQUIRED PRESSURE.
5. CONTRACTOR TO COORDINATE INSTALLATION WITH BOILER MANUFACTURER OR REP.

COOLING TOWER SCHEDULE

MARK	GPM	EWT °F	LWT °F	O.A. AMBIENT WB °F	NO. CELLS	FAN MOTOR H.P.	VFD	VOLTAGE/PHASE/HERTZ	MFG-MODEL	OPERATING WEIGHT (lb)	NOTES
CT-1	879	95	85	80	1	7.5 (2)	YES (2)	460/3/60	REYMSA 816275	13213	1,2,3,4,5,6

NOTES:
1. COUNTER FLOW CONFIGURATION.
2. SINGLE SPEED MOTOR. POWERED THRU VFD.
3. PROVIDE ACCESS LADDER WITH SAFETY CAGE.
4. AIR INLET SCREENS
5. PROVIDE EXTERNAL SERVICE PLATFORMS AND OSHA HANDRAIL.
6. PROVIDE VIBRATION SWITCH. HARDWIRE SWITCH TO DRY CONTACT AT VFD FOR SHUTDOWN.

HEAT EXCHANGER SCHEDULE

	SIDE 1					SIDE 2								
MARK	SERVES	INLET/OUTLET SIZE	FLOW (GPM)	EWT/LWT	PRESSURE DROP (PSI)	SERVES	INLET/OUTLET SIZE	FLOW (GPM)	EWT/LWT	PRESSURE DROP (PSI)	OPERATING WEIGHT (LBS)	MANUFACTURER	MODEL	NOTES
HXN-1	COOLING TOWER	6"/6"	879	95/85	10	BUILDING	6"/6"	879	98/88	10	2854	BELL & GOSSET	P41	1,2,3

NOTES:
1. PROVIDE ASME APPROVAL WITH 'U' STAMP.
2. PROVIDE HEAT EXCHANGER WITH A MAX DESIGN PRESSURE OF 150 PSI.
3. PROVIDE 150# ANSI FLANGES AT CONNECTIONS.

PUMP SCHEDULE

MARK	SERVICE	TYPE	GPM	DYNAMIC HEAD-FT	RPM	MIN. EFF% HP	NPSH MIN. REQ.	MOTOR DATA			MFG-MODEL	NOTES
								HP	VOLT	PHASE		
TP-1,-2	OPEN LOOP	END SUCTION	879	60	1750	80	–	20	460	3	B&G 1510-5BC	1
BP-1,-2,-3	CLOSED LOOP	END SUCTION	440	90	1750	75	–	20	460	3	B&G 1510-35	1

NOTES:
1. POWERED THRU VARIABLE FREQUENCY DRIVE.

SOLIDS SEPARATOR SCHEDULE

MARK	FLOW (GPM)	INLET (IN)	OUTLET (IN)	PUMP			COLLECTION VESSEL CAP. (GAL)	MANUFACTURER/ MODEL #	REMARKS
				VOLT/PH	HP	MOTOR TYPE			
SS-1	145	3	2-1/2	460/3	5	TEFC	–	TCX 0145-SRV	1,2,3

NOTES:
1. UNIT SHALL BE A PACKAGED SYSTEM AND SHALL INCLUDE THE FOLLOWING COMPONENTS: BASKET STRAINER, END-SUCTION PUMP, TANGENTIAL SOLIDS SEPARATOR, SOLIDS COLLECTION VESSEL, AND ELECTRICAL CONTROL PANEL.
2. UNIT SHALL BE PROVIDED WITH DRY CONTACT RELAY FOR BAG SERVICING.

SELF-CONTAINED A.C. UNIT SCHEDULE

DESIGNATION	AHU-1	AHU-2	AHU-3
UNIT TYPE	WATER COOLED	WATER COOLED	WATER COOLED
ARRANGEMENT	VERTICAL S.C.	VERTICAL S.C.	VERTICAL S.C.
SERVES	RESTAURANT	KITCHEN	MAKE-UP
FAN			
TYPE	FORWARD CURVED	FORWARD CURVED	FORWARD CURVED
NO. OF FAN WHEELS	1	1	1
FAN HORSEPOWER	10.0	7.5	5.0
DRIVE TYPE	BELT	BELT	BELT
CFM	7550	5650	5000
OUTSIDE AIR (CFM)	2800	2100	5000
EXTERNAL PRESSURE	2.0	2.0	0.5
RPM	1030	1200	920
VARIABLE FREQUENCY DRIVE	YES	YES	YES
COOLING COIL			
TOTAL MBH	365	255	347
SENSIBLE MBH	215	163	178
ENTERING AIR TEMP. (DB/WB)	82.5/69.4	82.3/69.2	95/80
LEAVING AIR TEMP. (DB/WB)	55/54	55/54	64/64
MAX FACE VELOCITY (FPM)	500	500	500
MAX STATIC PRESSURE DROP	1.0	1.0	1.0
MIN NO. OF ROWS	6	6	6
MAX FINS PER INCH	12	12	12
CONDENSER COIL			
GPM	91	66	84
MAX WATER PRESSURE DROP (FT WG)	30	20	30
ENTERING WATER TEMP. (°F)	88	88	88
LEAVING WATER TEMP. (°F)	98	98	98
NUMBER OF COMPRESSORS	4	4	4
REFRIGERANT	R-410A	R-410A	R-410A
NUMBER OF STAGES	4	4	4
MINIMUM CAPACITY (%)	25%	25%	25%
COMPRESSOR TYPE	HERMETIC SCROLL	HERMETIC SCROLL	HERMETIC SCROLL
FILTER			
TYPE	2" PLEATED, 30%	2" PLEATED, 30%	2" PLEATED, 30%
MAX FACE VELOCITY	300	300	300
STATIC PRESSURE DROP	0.5	0.5	0.5
ELECTRICAL			
VOLTAGE - PHASE - HERTZ	460/60/3	460/60/3	460/60/3
MCA	55.2	44.7	40
MOCP	60	50	45
DAMPER			
MANUFACTURER	MCQUAY	MCQUAY	MCQUAY
MODEL #	SWT028C	SWT018C	SWP018D
UNIT WEIGHT	3995	3515	4029
NOTES:	1,2,3,6,7,8	1,2,3,6,7,8	1-8

NOTES:
1. SELECT FAN WITH 0.5" PRESSURE DROP FOR DIRTY FILTERS.
2. PROVIDE STAINLESS STEEL COIL CASINGS.
3. PROVIDE BACNET OR LON BASE INTERFACE CARD - COORDINATE WITH CONTRACTOR.
4. PROVIDE WITH 100% OUTSIDE AIR CONTROL SOFTWARE.
5. PROVIDE DISCHARGE AIR PLENUM (MAXIMUM 24" HEIGHT).
6. PROVIDE NON-FUSED DISCONNECT SWITCH.
7. PROVIDE COMPRESSOR SERVICE ISOLATION VALVES WITH ROTO LOCKS.
8. PROVIDE INTEGRAL VARIABLE FREQUENCY DRIVE WITH BYPASS.

ELECTRIC HEATER SCHEDULE

MARK	SERVES	CFM	BTU/H	KW	VOLT/PH	AMPS	MFGR	MODEL
EH-1	RISER ROOM	400	11.2	3.3	460/3	4.0	REDD-I	P3P5103CA1N

ACCESSORIES:
1. FACTORY MOUNTED CONTROLS TRANSFORMER (480-24V)
2. UNIT-MOUNTED THERMOSTAT.
3. OVERHEAT PROTECTION, AUTOMATIC RESET TYPE.
4. HORIZONTAL DISCHARGE.
5. WALL/CEILING BRACKET.

VARIABLE FREQUENCY DRIVE SCHEDULE

MARK	SERVES	ITEM	HP	AMPS	INPUT VOLT/PHASE	OUTPUT VOLT/PHASE	MOUNTING	ENCLOSURE	REF. SPEC	MODEL	HxWxD (in.)
VFD-CT1,-CT2	CT-1	FAN	7.5	11	460/3	460/3	WALL	NEMA 12	YASKAWA	E7CBB011CX	30X20X14
VFD-TP1,-TP2	TP-1,-2	PUMP	20	27	460/3	460/3	WALL	NEMA 12	YASKAWA	E7CBB027CX	30X20X14
VFD-BP1,-BP2,-BP3	BP-1,-2,-3	PUMP	20	27	460/3	460/3	WALL	NEMA 12	YASKAWA	E7CBB027CX	30X20X14
VFD-KEF1	KEF-1	FAN	2	3.4	460/3	460/3	WALL	NEMA 12	YASKAWA	E7CBB003CX	30X20X14
VFD-KEF2	KEF-2	FAN	2	3.4	460/3	460/3	WALL	NEMA 12	YASKAWA	E7CBB003CX	30X20X14
VFD-KEF3	KEF-3	FAN	2	3.4	460/3	460/3	WALL	NEMA 12	YASKAWA	E7CBB003CX	30X20X14

NOTES:
1. VFD SHALL BE PROVIDED BY MECHANICAL CONTRACTOR AND WIRED BY ELECTRICAL CONTRACTOR.
2. PROVIDE VFD WITH DISCONNECT.

NOTE: CONTRACTOR SHALL PROVIDE ONE ADDITIONAL VFD PER MANUFACTURER'S STANDARD FRAME SIZE.
VFD(S) SHALL BE PROVIDED IN A SPARE CAPACITY AND TURNED OVER TO THE OWNER WITH EXTRA MATERIALS.

GRILLE/DIFFUSER/REGISTER SCHEDULE

MARK	SERVICE	DESCRIPTION	MANUFACTURER MODEL No.	MAX. NC LEVEL (1)	REMARKS
A	SUPPLY	24"X24" MODULE SIZE, ALUMINUM, LOUVERED, LAY IN DIFFUSER WITH 4 WAY THROW, ROUND NECK, FACE SIZE AS INDICATED BELOW.	TITUS TDC-AA	30	#26 WHITE FINISH
B	SUPPLY	12"X12" MODULE SIZE, ALUMINUM, LOUVERED, SURFACE-MOUNTED DIFFUSER WITH 4-WAY THROW, ROUND NECK, FACE SIZE AS INDICATED BELOW.	TITUS TDC-AA	30	#26 WHITE FINISH
D	SUPPLY	SURFACE MOUNTED SUPPLY DIFFUSER WITH 3/4" SPACING, ALUMINUM CONSTRUCTION, DOUBLE DEFLECTION WITH OPPOSED BLADE DAMPER.	TITUS 300FL	30	#26 WHITE FINISH
F	SUPPLY	24"X24" PERFORATED FACE, CEILING SUPPLY GRILL WITH BORDER FOR LAY-IN CEILING. ALUMINUM CONSTRUCTION.	TITUS PAR-AA	35	#26 WHITE FINISH
G	RETURN	24"X24" EGGCRATE FACE, CEILING RETURN GRILL WITH BORDER FOR LAY-IN CEILING, ALUMINUM CONSTRUCTION.	TITUS 50F	30	#26 WHITE FINISH
I	RETURN	12"X12" EGGCRATE FACE, CEILING RETURN GRILLE, SURFACE MOUNTED, ALUMINUM CONSTRUCTION.	TITUS 50F	30	#26 WHITE FINISH
J	RETURN	SURFACE MOUNTED RETURN GRILLE WITH 3/4" SPACING. ALUMINUM CONSTRUCTION, 35° DEFLECTION.	TITUS 350FL	30	#26 WHITE FINISH
N	SUPPLY	DUCT MOUNTED SUPPLY DIFFUSER WITH 3/4" SPACING, ALUMINUM CONSTRUCTION, DOUBLE DEFLECTION WITH RADIUS END CAPS, FOAM GASKETS, AIR SCOOP DAMPERS.	TITUS S300FL	30	COLOR BY ARCHITECT

(F) = THIS WILL DESIGNATE A STEEL FIRE RATED AIR DEVICE TYPE.

CBA = COLOR BY ARCHITECT

* = SEE ARCHITECTURAL DRAWINGS PROPER BORDER TYPES

AIR OUTLET DESIGNATION ON PLANS

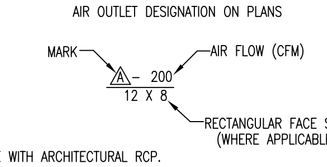

CAPACITY	FACE	NECK/FLEXIBLE CONNECTION
0-150	6 X 6	6"
151-285	9 X 9	8"
286-440	12 X 12	10"
441-550	12 X 12	12"
551-750	15 X 15	14"
750-1000	18 X 18	16"

NOTE: COORDINATE ALL AIR DEVICE TYPE WITH ARCHITECTURAL RCP.

LOUVER SCHEDULE

MARK	SERVES	CFM	WIDTH (IN)	HEIGHT (IN)	MINIMUM FREE AREA	MAX. PRESSURE DROP AT 750 FPM		REFERENCE SPECS	REMARKS
						EXHAUST (" w.g.)	INTAKE (" w.g.)		
L-1	AHU-1	2800	48	30	3.88	–	0.1	RUSKIN - EME520DD	1,2
L-2	AHU-2	2100	48	24	2.91	–	0.1	RUSKIN - EME520DD	1,2
L-3	AHU-3	5000	60	42	7.18	–	0.1	RUSKIN - EME520DD	1,2
L-4	EF-1	300	18	12	0.4	0.1	–	RUSKIN - EME520DD	1,2
L-5	EF-2	100	12	12	0.34	0.1	–	RUSKIN - EME520DD	1,2
L-6	KEF-4	525	18	18	0.76	0.1	–	RUSKIN - EME520DD	1,2
L-7	KEF-5	1845	46	22	2.47	0.1	–	RUSKIN - EME520DD	1,2
L-8	BLDG. RELIEF	2400	42	30	3.37	0.1	–	RUSKIN - EME520DD	1,2

REMARKS
1. FINISH SHALL BE MILL ALUMINUM
2. LOUVER SHALL PROVIDE MINIMUM 99% EFFECTIVENESS IN PREVENTING WATER PENETRATION IN WIND DRIVEN RAIN TEST (29 mph, 3 in/hr).

FAN SCHEDULE

MARK	EF-1	EF-2	KEF-1	KEF-2	KEF-3	KEF-4	KEF-5
CFM	300	100	3000	3670	2920	525	1845
SERVICE	TOILET	TOILET	KH-1	KH-2	KH-3	KH-4	KH-5
LOCATION	ABOVE CLG.	ABOVE CLG.	ABOVE CLG.	ABOVE CLG.	ABOVE CLG.	ABOVE CLG.	ABOVE CLG.
TYPE	INLINE	CABINET	SIDEWALL	SIDEWALL	SIDEWALL	INLINE	SIDEWALL
RPM	1300	1050	1540	1670	1525	1635	1600
EXT SP (IN WG)	0.5	0.6	1.75	1.75	1.75	0.5	1.25
HP	1/4	129watts	2	2	1.5	1/4	3/4
DRIVE	DIRECT	DIRECT	BELT	BELT	BELT	BELT	BELT
ELECTRICAL VOLTS/PHASE	120/1	120/1	460/3	460/3	460/3	120/1	460/3
MAX. SONES	9.1	4.5	20.0	23.0	19.7	10.2	11.9
MANUFACTURER	GREENHECK	GREENHECK	GREENHECK	GREENHECK	GREENHECK	GREENHECK	GREENHECK
MODEL	BSQ-80	SPB-150	CWB-190HP20	CWB-180HP20	CWB-180HP15	TCB-2-09	CWB-141-7
NOTES	1,2,4,6	1,3,4,6	1,7,8	1,7,8	1,7,8	1,4,6,9	1,7

NOTES
1. FAN SHALL HAVE INTEGRAL DISCONNECT SWITCH FROM FACTORY.
2. FAN SHALL BE CONTROLLED THROUGH EMS TO OPERATE DURING OCCUPIED PERIOD.
3. FAN SHALL BE SWITCHED WITH LIGHTS.
4. FAN SHALL BE PROVIDED WITH BACK DRAFT DAMPER.
5. FAN SHALL BE PROVIDED WITH 14" GALVANIZED CURB WITH DAMPER TRAY.
6. FAN SHALL BE PROVIDED WITH FACTORY MOUNTED FAN SPEED CONTROL.
7. FAN SHALL BE POWERED THRU VFD.
8. FAN SHALL BE SWITCHED WITH EXHAUST HOOD CONTROL PANEL.
9. FAN SHALL BE ENERGIZED WITH DISHWASHER HOOD CONTROL SWITCH.

HALFF
5000 WEST MILITARY, SUITE 100
McALLEN, TEXAS 78503
TEL (956) 664-0286
FAX (956) 664-0282
Halff Associates firm registration number is 312

100% PRICING SET

REVISIONS

The Reese
Phase I
202 S. 1st. Street
Harlingen, TX

MECHANICAL SCHEDULES

MEGAMORPHOSIS
- ARCHITECTURE & INTERIOR DESIGN
1409 N. STUART PLACE RD., SUITE D
PHONE #(956) 428-1779 FAX # (956) 425-5888

PROJECT # 27074
MAR. 26, 2010
M-2.1

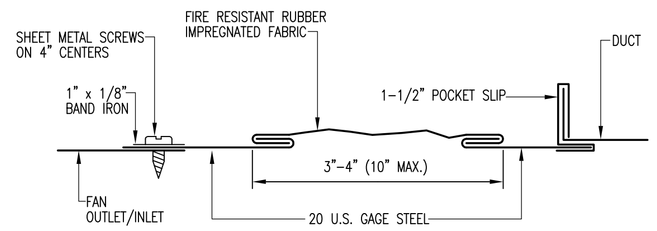

01 FLEXIBLE CONNECTION DETAIL
Scale: N.T.S.

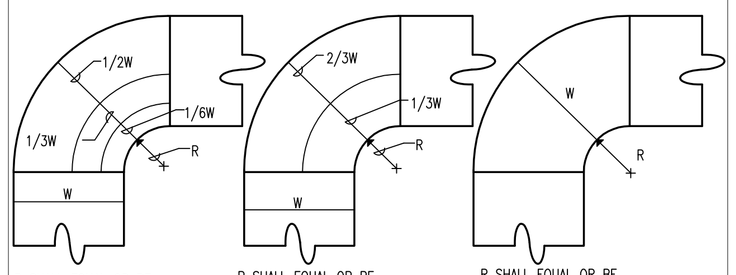

NOTES:

1. THE INTERIOR SURFACE OF ALL RADIUS ELBOWS SHALL BE MADE ROUND
2. ALL STANDARD RADIUS ELBOWS SHOWN ON PLANS MAY BE MADE SHORT RADIUS ELBOWS. ALL SHORT RADIUS ELBOWS SHALL HAVE VANES. VANES SHALL BE CONSTRUCTED, SUPPORTED AND FASTENED AS RECOM-MENDED BY SMACNA.

02 RADIUS DUCT ELBOW DETAIL
Scale: N.T.S.

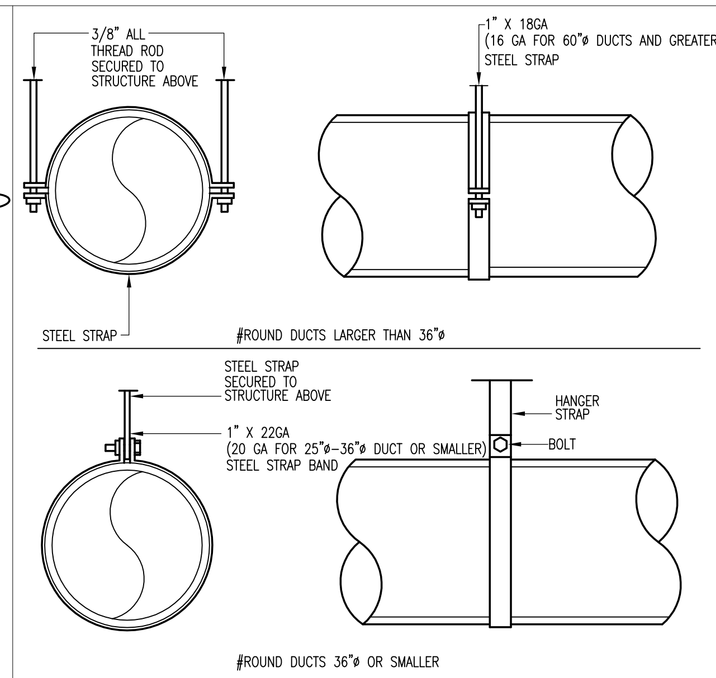

03 EXPOSED AND CONCEALED ROUND DUCT HANGER
SCALE: NTS

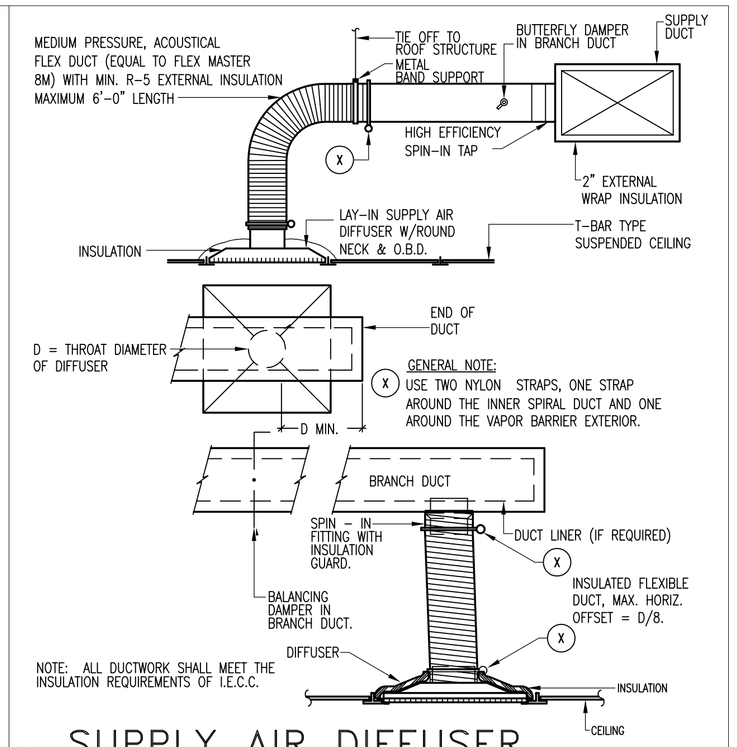

GENERAL NOTE:
USE TWO NYLON STRAPS, ONE STRAP AROUND THE INNER SPIRAL DUCT AND ONE AROUND THE VAPOR BARRIER EXTERIOR.

NOTE: ALL DUCTWORK SHALL MEET THE INSULATION REQUIREMENTS OF I.E.C.C.

04 SUPPLY AIR DIFFUSER
Scale: N.T.S.

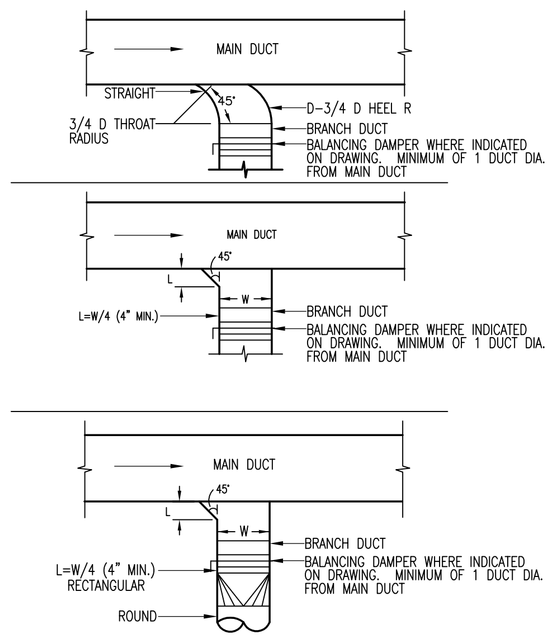

05 TYPICAL BRANCH CONNECTION
Scale: N.T.S.

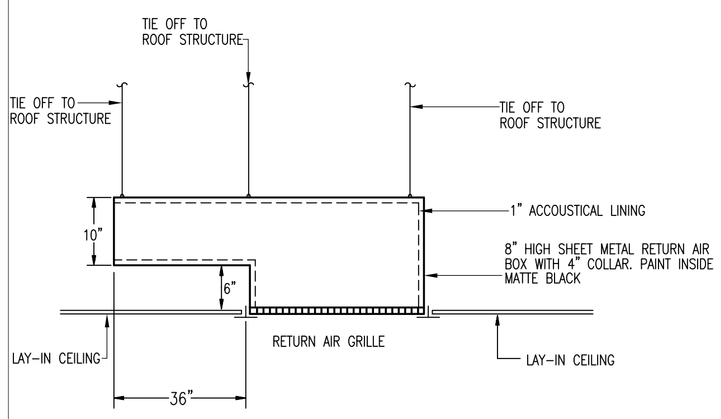

06 RETURN AIR BOOT DETAIL
Scale: N.T.S.

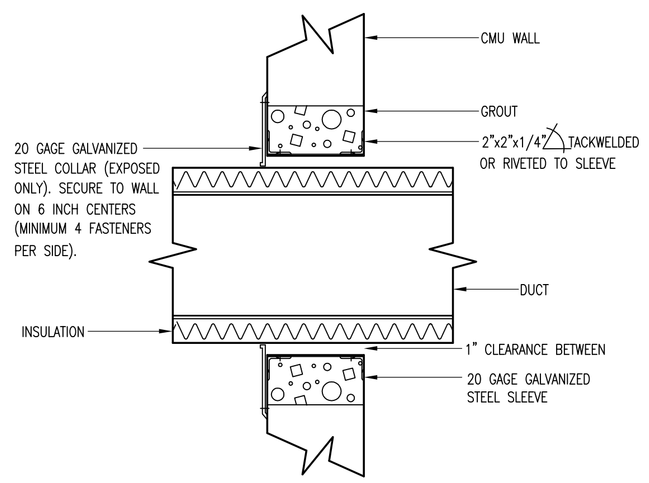

07 DUCT PENETRATION THRU WALL
Scale: N.T.S.

PLENUM CROSS OVER DIMENSIONS	
CFM	DUCT SIZE
<150	10 X 6
151-250	12 X 8
251-350	16 X 8
351-450	16 X 10
451-550	18 X 10
551-750	18 X 12
751-950	22 X 12
951-1200	26 X 12
1201-1500	26 X 14

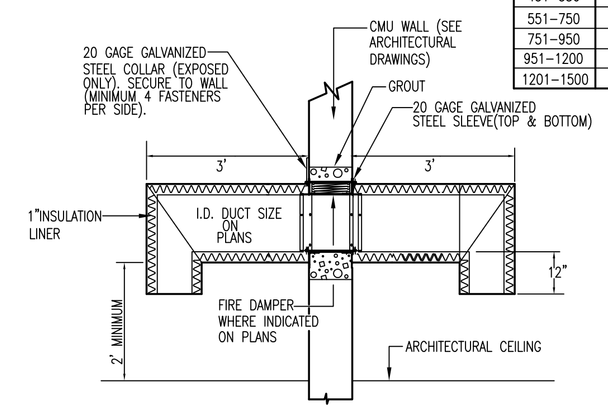

08 PLENUM CROSSOVER RETURN
Scale: N.T.S.

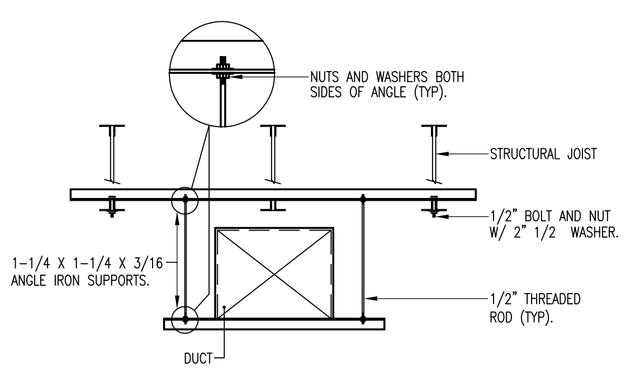

09 DUCT HANGER DETAIL
Scale: N.T.S.

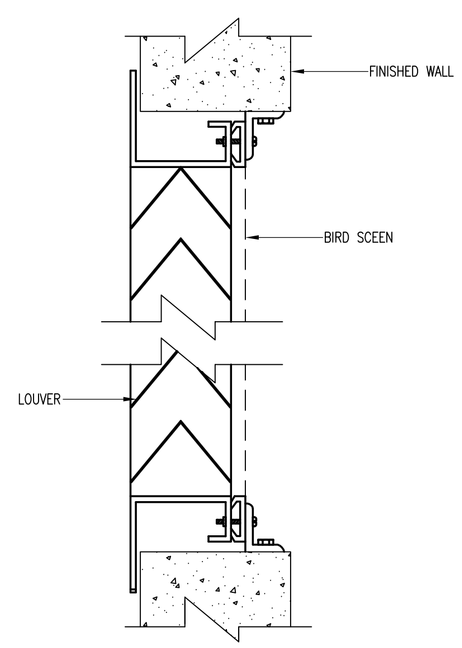

10 WALL LOUVER
Scale: N.T.S.

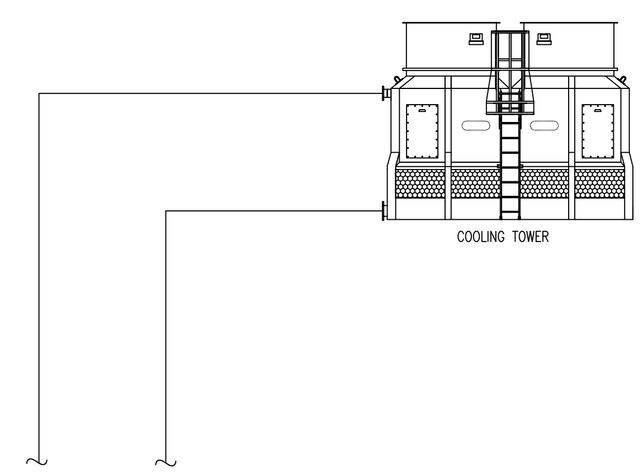

11 COOLING TOWER PIPING DETAIL
SCALE: N.T.S.

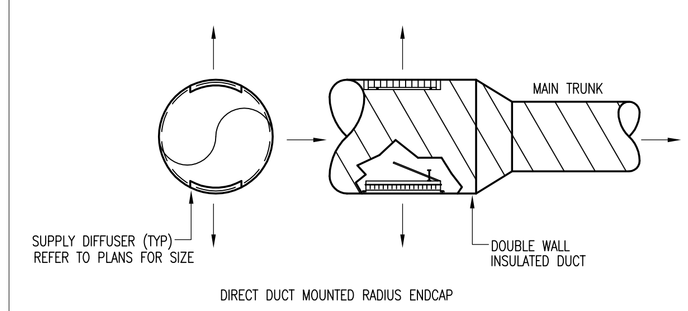

* FOR INFORMATIONAL PURPOSES ONLY

12 TYP. EXPOSED DUCT SUPPLY DIFFUSER DTL
SCALE: NTS

HALFF
5000 WEST MILITARY, SUITE 100
McALLEN, TEXAS 78503
TEL (956) 664-0286
FAX (956) 664-0282
Halff Associates firm registration number is 312

100% PRICING SET

REVISIONS

The Reese
Phase I
202 S. 1st. Street
Harlingen, TX

MECHANICAL DETAILS

MEGAMORPHOSIS
• ARCHITECTURE & INTERIOR DESIGN
1409 N. STUART PLACE RD., SUITE D
PHONE #(956) 428-1779 FAX # (956) 425-5886

PROJECT # 27074
MAR. 26, 2010
M-3.1

NOTE:
1. COOLING TOWER CHEMICAL TREATMENT SHALL BE STAND ALONE. AUTOMATIC TREATMENT WILL NOT BE TIED TO THE DDC CONTROL SYSTEM. MOUNT ALL EQUIPMENT ON WALL 3/4" TREATED PLY WOOD.
2. SUBMITTAL REQUIRED FOR METERING PUMPS, TUBING, CONTROLLER VALVES AND MOUNTING DESIGN.

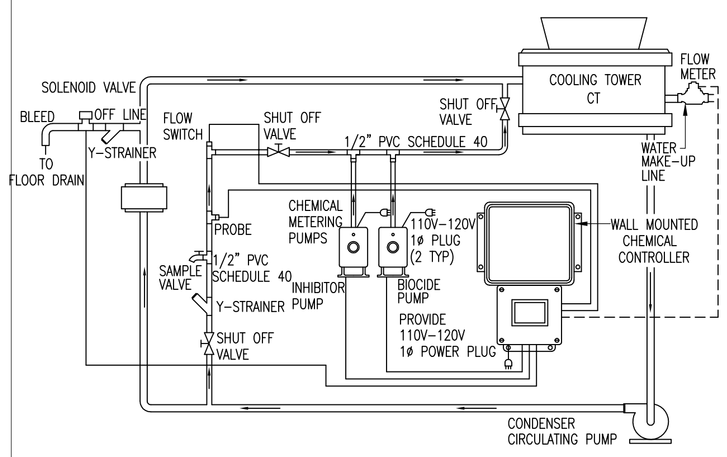

01 CONDENSER WATER TREATMENT
SCALE: N.T.S

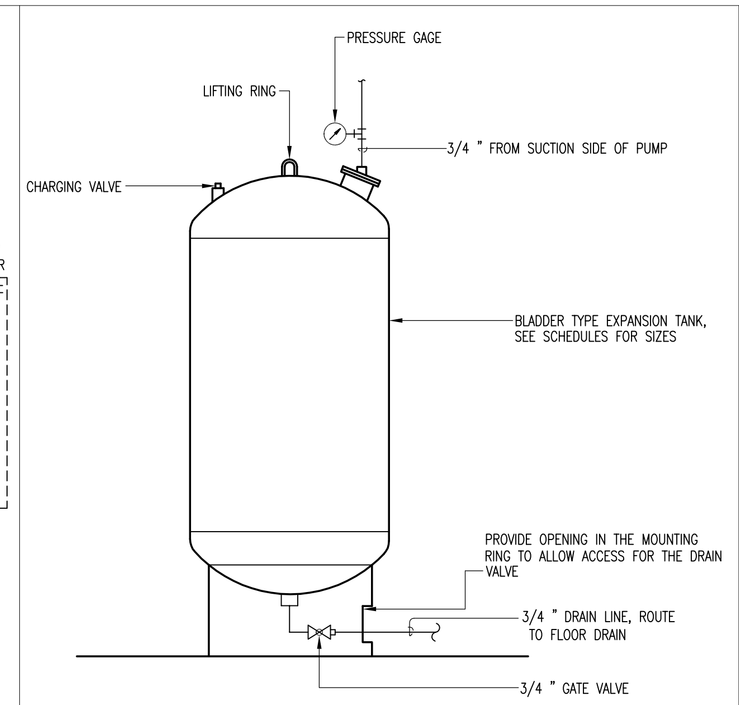

02 EXPANSION TANK DETAIL
SCALE: NTS

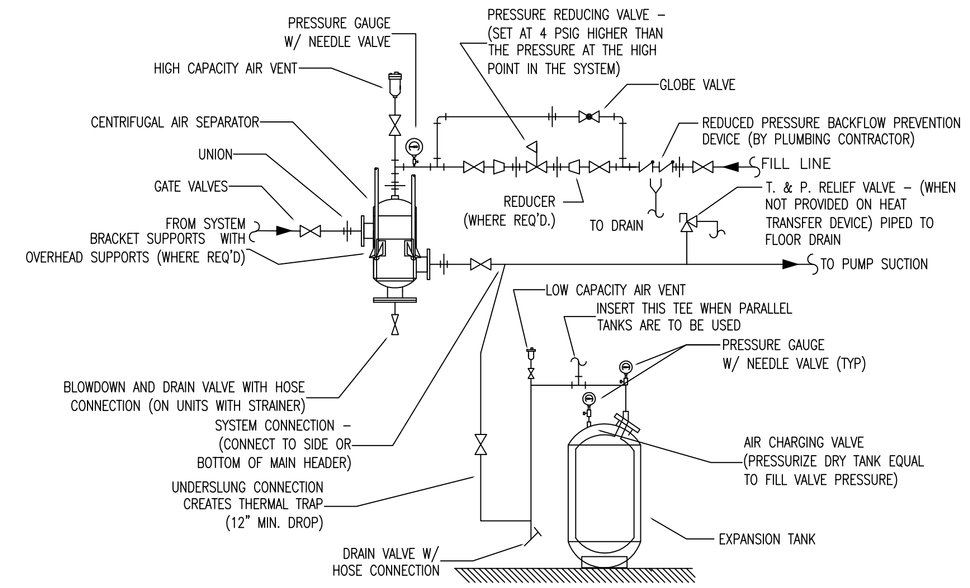

NOTE: ALL PIPE FITTINGS USED FOR TEMPERATURE, PRESSURE, AND DRAIN PORTS TO BE OF BRASS MATERIAL. NO BLACK PIPE ALLOWED.

03 AIR SEPARATOR AND EXPANSION TANK-(VERTICAL FLOOR MTD)
SCALE: NTS

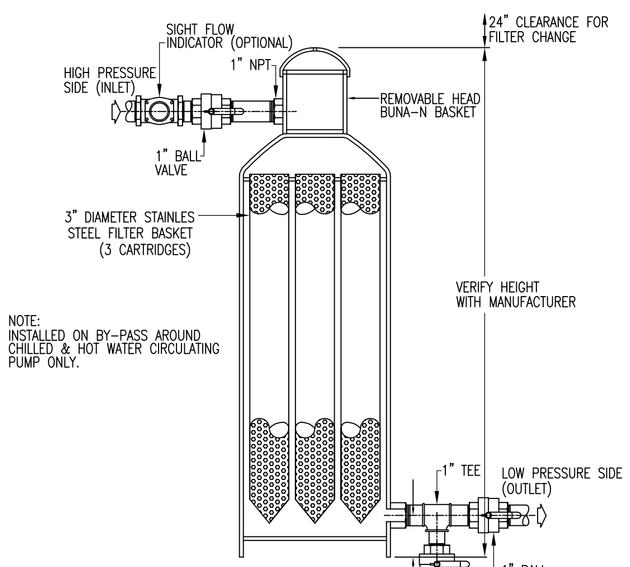

SPECIFICATIONS AND INSTALLATION:
1. OPERATE AT PRESSURES UP TO 150 PSI AND TEMPERATURES UP TO 200°F.
2. STAINLESS STEEL FILTER BASKETS.
3. INCLUDE BALL VALVES FOR BY-PASS AND DRAIN PIPING.
4. CAUTION: USE DIELECTRIC COUPLES IF PIPING IS OTHER THAN MILL STEEL.

04 THREE-CHEMICAL FILTER WITH FEEDER
SCALE: NTS

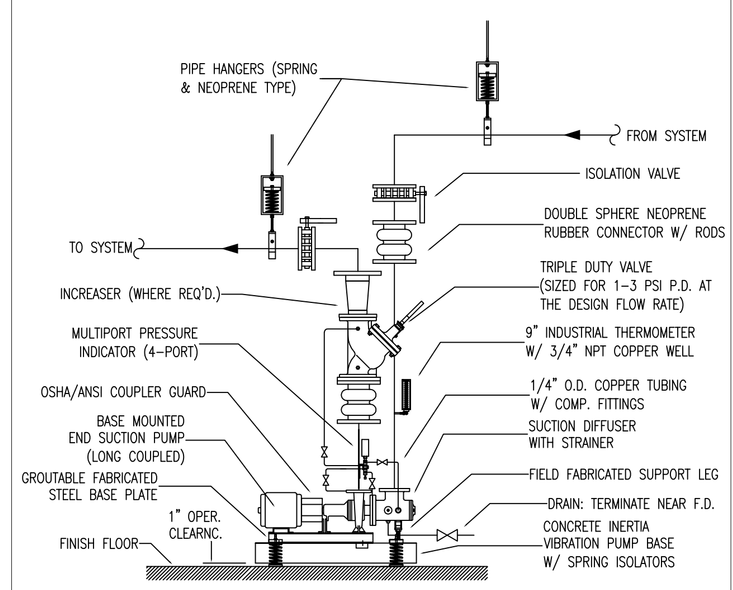

05 END SUCTION PUMP (BASE MOUNTED ON CONCRETE INERTIA BASE)
SCALE: NTS

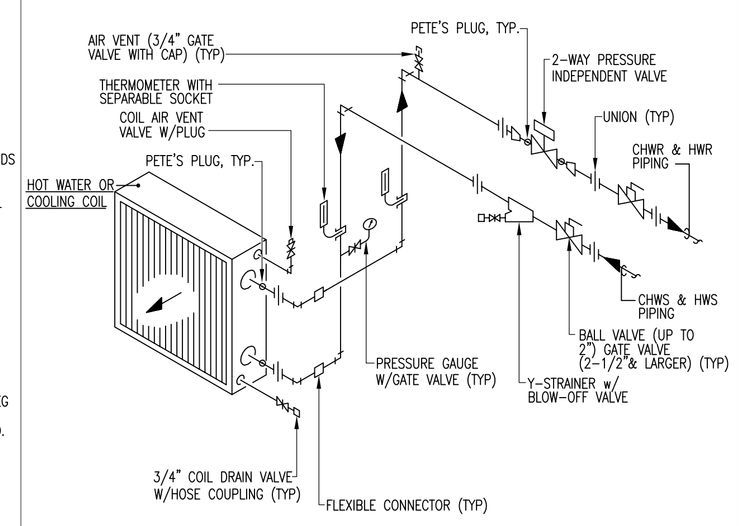

NOTE: ALL PIPE FITTINGS USED FOR TEMPERATURE, PRESSURE, AND DRAIN PORTS TO BE OF BRASS MATERIAL. NO BLACK PIPE ALLOWED.

06 TYPICAL SELF-CONTAINED UNIT COIL PIPING
SCALE: N.T.S. 2-WAY VALVE

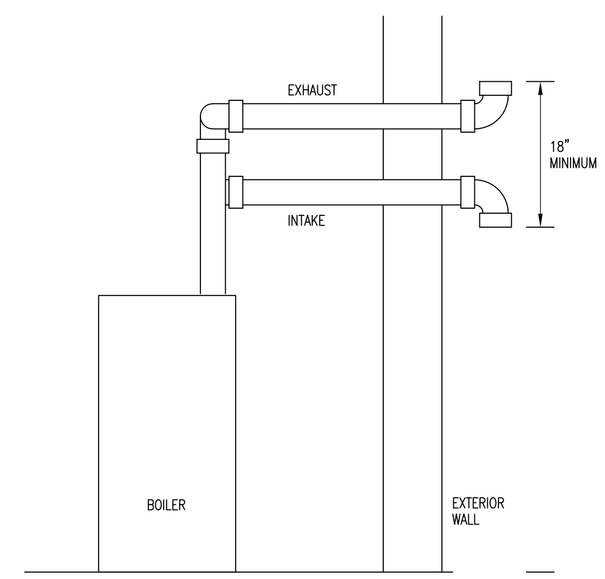

07 SIDEWALL VENT FOR BOILER
SCALE: NTS

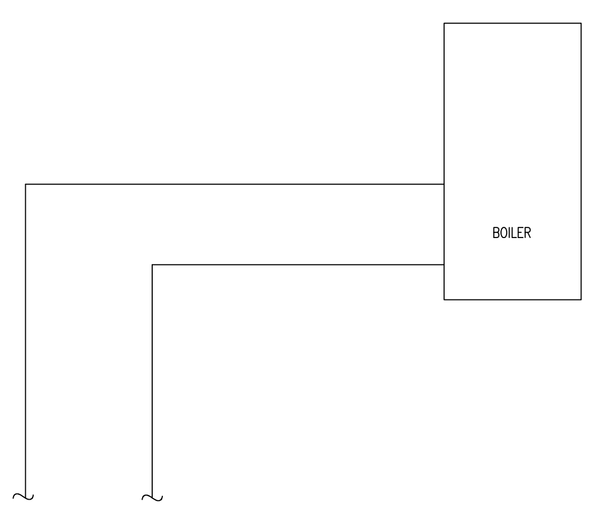

08 BOILER PIPING DETAIL
SCALE: N.T.S.

REVISIONS

The Reese
Phase I
202 S. 1st. Street
Harlingen, TX

MECHANICAL DETAILS

MEGAMORPHOSIS
ARCHITECTURE & INTERIOR DESIGN
1409 N. STUART PLACE RD., SUITE D
PHONE #(956) 428-1779 FAX # (956) 425-5886

HALFF
5000 WEST MILITARY, SUITE 100
McALLEN, TEXAS 78503
TEL (956) 664-0286
FAX (956) 664-0282
Halff Associates firm registration number is 312

100% PRICING SET

PROJECT # 27074

MAR. 26, 2010

M-3.2

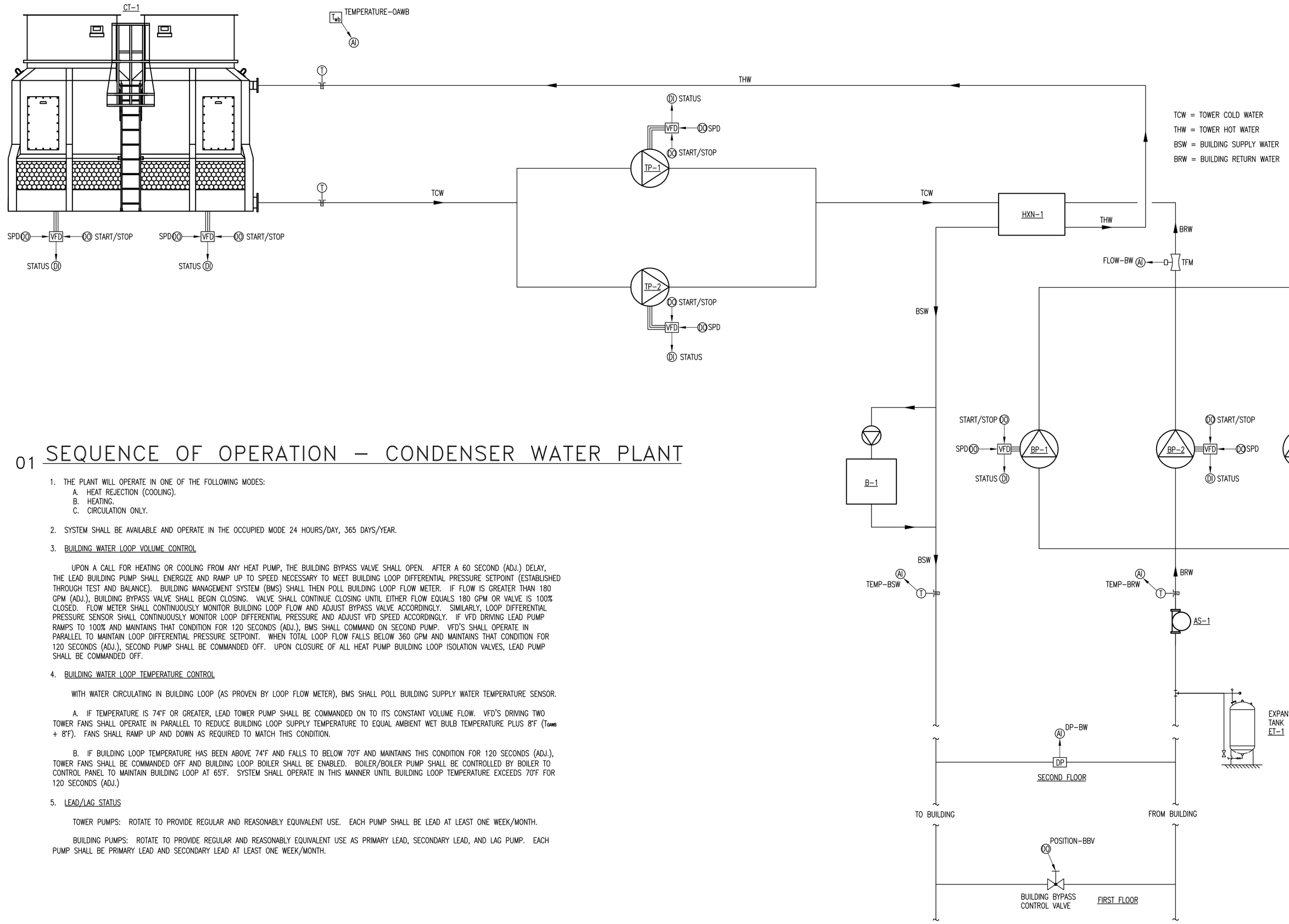

01 SEQUENCE OF OPERATION – CONDENSER WATER PLANT

1. THE PLANT WILL OPERATE IN ONE OF THE FOLLOWING MODES:
   A. HEAT REJECTION (COOLING).
   B. HEATING.
   C. CIRCULATION ONLY.

2. SYSTEM SHALL BE AVAILABLE AND OPERATE IN THE OCCUPIED MODE 24 HOURS/DAY, 365 DAYS/YEAR.

3. BUILDING WATER LOOP VOLUME CONTROL

UPON A CALL FOR HEATING OR COOLING FROM ANY HEAT PUMP, THE BUILDING BYPASS VALVE SHALL OPEN. AFTER A 60 SECOND (ADJ.) DELAY, THE LEAD BUILDING PUMP SHALL ENERGIZE AND RAMP UP TO SPEED NECESSARY TO MEET BUILDING LOOP DIFFERENTIAL PRESSURE SETPOINT (ESTABLISHED THROUGH TEST AND BALANCE). BUILDING MANAGEMENT SYSTEM (BMS) SHALL THEN POLL BUILDING LOOP FLOW METER. IF FLOW IS GREATER THAN 180 GPM (ADJ.), BUILDING BYPASS VALVE SHALL BEGIN CLOSING. VALVE SHALL CONTINUE CLOSING UNTIL EITHER FLOW EQUALS 180 GPM OR VALVE IS 100% CLOSED. FLOW METER SHALL CONTINUOUSLY MONITOR BUILDING LOOP FLOW AND ADJUST BYPASS VALVE ACCORDINGLY. SIMILARLY, LOOP DIFFERENTIAL PRESSURE SENSOR SHALL CONTINUOUSLY MONITOR LOOP DIFFERENTIAL PRESSURE AND ADJUST VFD SPEED ACCORDINGLY. IF VFD DRIVING LEAD PUMP RAMPS TO 100% AND MAINTAINS THAT CONDITION FOR 120 SECONDS (ADJ.), BMS SHALL COMMAND ON SECOND PUMP. VFD'S SHALL OPERATE IN PARALLEL TO MAINTAIN LOOP DIFFERENTIAL PRESSURE SETPOINT. WHEN TOTAL LOOP FLOW FALLS BELOW 360 GPM AND MAINTAINS THAT CONDITION FOR 120 SECONDS (ADJ.), SECOND PUMP SHALL BE COMMANDED OFF. UPON CLOSURE OF ALL HEAT PUMP BUILDING LOOP ISOLATION VALVES, LEAD PUMP SHALL BE COMMANDED OFF.

4. BUILDING WATER LOOP TEMPERATURE CONTROL

WITH WATER CIRCULATING IN BUILDING LOOP (AS PROVEN BY LOOP FLOW METER), BMS SHALL POLL BUILDING SUPPLY WATER TEMPERATURE SENSOR.

A. IF TEMPERATURE IS 74°F OR GREATER, LEAD TOWER PUMP SHALL BE COMMANDED ON TO ITS CONSTANT VOLUME FLOW. VFD'S DRIVING TWO TOWER FANS SHALL OPERATE IN PARALLEL TO REDUCE BUILDING LOOP SUPPLY TEMPERATURE TO EQUAL AMBIENT WET BULB TEMPERATURE PLUS 8°F (T_{OAWB} + 8°F). FANS SHALL RAMP UP AND DOWN AS REQUIRED TO MATCH THIS CONDITION.

B. IF BUILDING LOOP TEMPERATURE HAS BEEN ABOVE 74°F AND FALLS TO BELOW 70°F AND MAINTAINS THIS CONDITION FOR 120 SECONDS (ADJ.), TOWER FANS SHALL BE COMMANDED OFF AND BUILDING LOOP BOILER SHALL BE ENABLED. BOILER/BOILER PUMP SHALL BE CONTROLLED BY BOILER TO CONTROL PANEL TO MAINTAIN BUILDING LOOP AT 65°F. SYSTEM SHALL OPERATE IN THIS MANNER UNTIL BUILDING LOOP TEMPERATURE EXCEEDS 70°F FOR 120 SECONDS (ADJ.)

5. LEAD/LAG STATUS

TOWER PUMPS: ROTATE TO PROVIDE REGULAR AND REASONABLY EQUIVALENT USE. EACH PUMP SHALL BE LEAD AT LEAST ONE WEEK/MONTH.

BUILDING PUMPS: ROTATE TO PROVIDE REGULAR AND REASONABLY EQUIVALENT USE AS PRIMARY LEAD, SECONDARY LEAD, AND LAG PUMP. EACH PUMP SHALL BE PRIMARY LEAD AND SECONDARY LEAD AT LEAST ONE WEEK/MONTH.

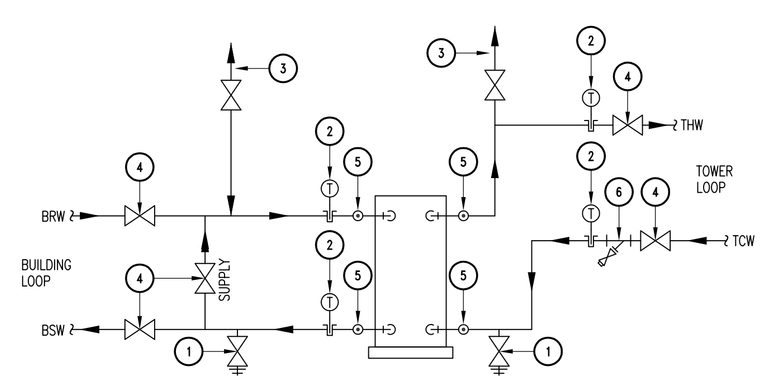

1. 3/4" DRAIN VALVE WITH HOSE CONNECTION.
2. THERMOMETER.
3. MANUAL AIR VENTS.
4. ISOLATION VALVE.
5. PRESSURE AND TEMPERATURE TEST PLUGS.
6. STRAINER WITH BLOWDOWN VALVE. PROVIDE HOSE CONNECTION.

02 PLATE AND FRAME HEAT EXCHANGER PIPING DETAIL – HXN-1

HALFF
5000 WEST MILITARY, SUITE 100
McALLEN, TEXAS 78503
TEL (956) 664-0286
FAX (956) 664-0282
Halff Associates firm registration number is 312

100% PRICING SET

REVISIONS

The Reese
Phase I
202 S. 1st. Street
Harlingen, TX

MECHANICAL
FLOW DIAGRAM

MEGAMORPHOSIS
• ARCHITECTURE & INTERIOR DESIGN
1409 N. STUART PLACE RD., SUITE D
PHONE #(956) 428-1779 FAX # (956) 425-5886

PROJECT # 27074
MAR. 26, 2010
M-4.1

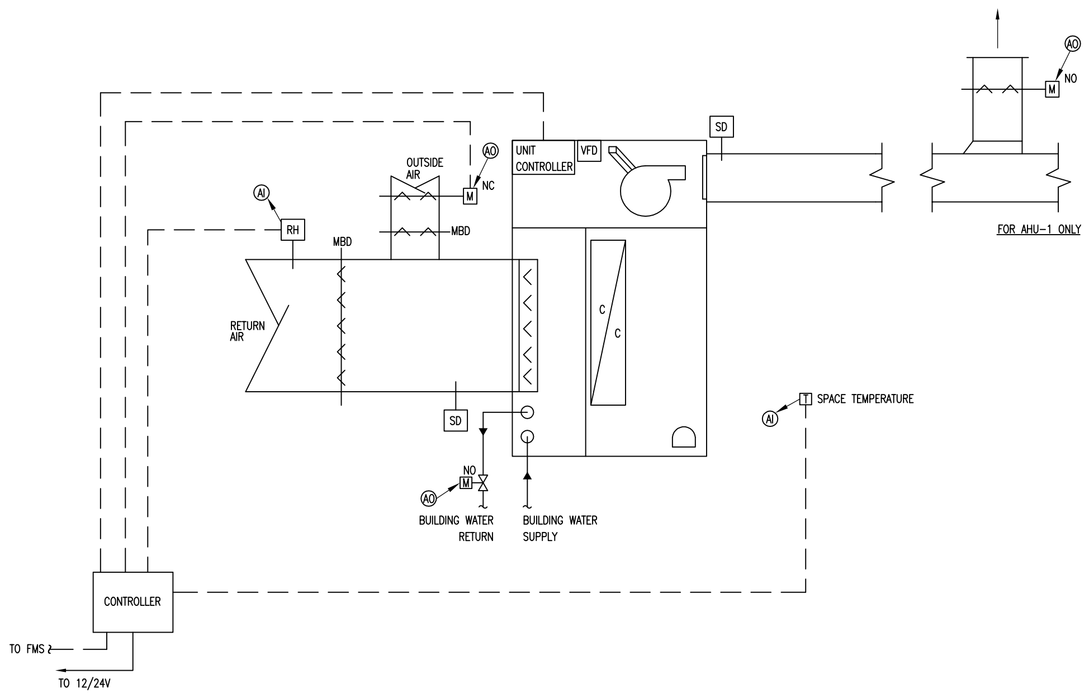

01 SELF-CONTAINED A.C. UNIT CONTROL DIAGRAM-VAV

SCALE: N.T.S.
(TYPICAL OF AHU-1,2)

START/STOP – THE BMS SHALL INITIATE START AND STOP CONTROL OF THE SYSTEM BY PROGRAMMED INPUT, TIMED OVERRIDE, OR OPERATOR OVERRIDE. THE BMS SHALL COMMAND THE OUTSIDE AIR DAMPER TO ITS SCHEDULED POSITION AND COMMAND THE BUILDING WATER ISOLATION VALVE OPEN. THE BMS SHALL THEN SIGNAL THE UNITS INTERNAL CONTROLLER TO OPERATE THE UNIT. UPON PROOF OF BUILDING WATER FLOW (INTERNAL FLOW SWITCH BY UNIT MANUFACTURER), VFD SHALL START FAN. INTERNAL UNIT CONTROLS SHALL RELAY FAN STATUS TO BMS.

TEMPERATURE CONTROL – THROUGH INTERNAL CONTROLS, THE INTERNAL DISCHARGE AIR TEMPERATURE SENSOR SHALL CONTROL THE COMPRESSOR STAGING TO PROVIDE A SUPPLY AIR TEMPERATURE OF 54°F (ADJ.) WHILE IN COOLING MODE. THE SPACE TEMPERATURE SENSOR SHALL PROVIDE SIGNAL TO UNIT CONTROLS VIA BMS TO CONTROL THE VFD TO INCREASE OR DECREASE AIRFLOW BASED UPON CONDITIONING REQUIREMENTS. IF THE SUPPLY AIR REACHES ITS MINIMUM SETPOINT, AS ESTABLISHED BY TEST AND BALANCE CONTRACTOR, AND THE SPACE TEMPERATURE IS 2°F (ADJ.) BELOW SETPOINT, THE BMS SHALL SIGNAL THE UNIT TO ENTER HEATING MODE. IN HEATING MODE, INTERNAL UNIT CONTROLS SHALL STAGE COMPRESSORS TO MAINTAIN 95°F (ADJ.) SUPPLY AIR TEMPERATURE. UNIT SHALL STAY IN HEATING MODE UNTIL TEMPERATURE EXCEEDS SETPOINT BY 2°F AT MINIMUM AIRFLOW. FOR AHU-1 ONLY, WHEN UNIT ENTERS HEATING MODE, CONTROL DAMPER SERVING MAIN ELECTRICAL ROOM SHALL CLOSE.

HUMIDITY CONTROL – A SPACE MOUNTED RELATIVE HUMIDITY SENSOR SHALL MONITOR AND CONTROL THE SPACE RELATIVE HUMIDITY TO 50% (ADJ.). WHEN SPACE RELATIVE HUMIDITY IS ABOVE SETPOINT BY 5% (NOT TO EXCEED 60%), THE CHILLED WATER VALVE SHALL OPEN 100%, THE VFD SHALL MODULATE THE FAN TO MAINTAIN A DISCHARGE AIR TEMPERATURE OF 50°F (MINIMUM AIRFLOW SHALL NOT BE LESS THAN VFD MINIMUM OR MINIMUM OUTSIDE AIR SCHEDULED), AND THE ELECTRIC HEATER SHALL ENERGIZE IN STAGES TO MAINTAIN SPACE TEMPERATURE SETPOINT. WHEN RELATIVE HUMIDITY ATTAINS SET POINT, THE SYSTEM WILL RETURN TO NORMAL OPERATION.

AUTOMATIC SHUTDOWN CONTROL – UPON DETECTION OF SMOKE AT ANY DUCT MOUNTED S.D. (FURNISHED, INSTALLED, AND WIRED FOR SHUTDOWN BY DIVISION 16) WITHIN THE AREA SERVED BY THE AHU, MOTOR SHALL BE DE-ENERGIZED.

MORNING WARM-UP/COOL-DOWN – UNIT SHALL ENERGIZE 30 MINUTES PRIOR TO START OF OCCUPIED PERIOD TO CONDITION SPACE PER OCCUPIED SEQUENCE OF OPERATIONS. DURING UNOCCUPIED PERIOD, OUTSIDE AIR DAMPER SHALL BE IN CLOSED POSITION. UPON COMMENCEMENT OF OCCUPIED PERIOD, OA DAMPER SHALL OPEN.

CONTROL
1. DUCT SMOKE DETECTOR SHALL STOP UNIT IF SMOKE IS DETECTED AT ANY DETECTOR.
2. RETURN AIR RH SENSOR SHALL CONTROL/MONITOR SPACE RELATIVE HUMIDITY.
3. SPACE TEMPERATURE SENSOR SHALL CONTROL ROOM TEMPERATURE AND SHALL BE LOCALLY ADJUSTABLE FOR 2°F ABOVE OR BELOW SETPOINT. SENSOR SHALL HAVE AFTER HOURS OVERRIDE TO INITIATE HEATING/COOLING SYSTEMS.

OCCUPIED MODE – COOLING – SPACE TEMPERATURE OF 74°F.
HEATING – SPACE TEMPERATURE OF 70°F.

UNOCCUPIED MODE – MAINTAIN SET BACK TEMPERATURE.
COOLING – 80°F.
HEATING – 64°F.

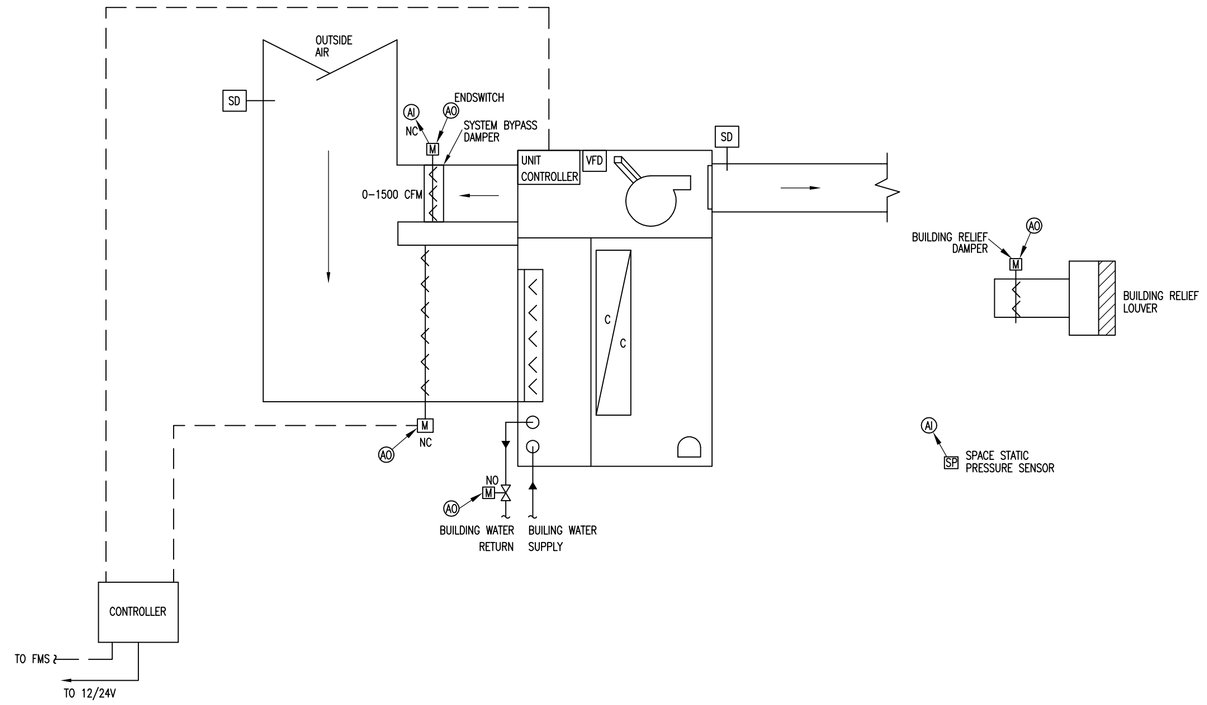

02 SELF-CONTAINED A.C. UNIT CONTROL DIAGRAM – KITCHEN MAKE-UP

SCALE: N.T.S.
(TYPICAL OF AHU-3, MAKE-UP AIR)

SYSTEM START/STOP – THE BMS SHALL INITIATE START AND STOP CONTROL OF THE SYSTEM BY INPUT FROM THE SPACE STATIC PRESSURE SENSOR. SYSTEM SHALL OPERATE IN ONE OF THREE MODES:
SP $\geq$ 0.15": AHU-3 IS OFF. BUILDING RELIEF DAMPER MODULATES TO MAINTAIN 0.15" POSITIVE (ADJ.).
0.05" $\leq$ SP $\leq$ 0.15": AHU-3 IS OFF. BUILDING RELIEF DAMPER IS CLOSED.
SP $\leq$ 0.05": AHU-3 IS COMMANDED ON. BUILDING RELIEF DAMPER IS CLOSED.

AUTOMATIC SHUTDOWN CONTROL – UPON DETECTION OF SMOKE AT ANY DUCT MOUNTED S.D. (FURNISHED, INSTALLED, AND WIRED FOR SHUTDOWN BY DIVISION 16) WITHIN THE AREA SERVED BY THE AHU, MOTOR SHALL BE DE-ENERGIZED.

UNIT START/STOP – AS DICTATED BY SPACE PRESSURE CONDITIONS DESCRIBED, BMS SHALL COMMAND AHU-3 ON. BMS SHALL OPEN BUILDING WATER ISOLATION VALVE. UPON PROOF OF BUILDING WATER FLOW (INTERNAL FLOW SWITCH BY UNIT MANUFACTURER), VFD SHALL START FAN AND RAMP UP CFM TO MINIMUM FAN FLOW RATE (AS DETERMINED BY TEST AND BALANCE). BMS SHALL THEN MODULATE BYPASS DAMPER TO MAINTAIN 0.5"w.g. STATIC PRESSURE. IF DAMPER IS FULLY CLOSED (AS PROVEN BY DAMPER END SWITCH) AND STATIC PRESSURE IS BELOW 0.05"w.g., BMS SHALL SIGNAL UNIT CONTROLLER TO RAMP UP VFD TO MAINTAIN 0.05"w.g. CONDITION.

TEMPERATURE CONTROL – UNIT'S INTERNAL CONTROLS SHALL CONTROL DISCHARGE AIR TEMPERATURE BY STAGING COMPRESSORS. HEATING OR COOLING MODE SHALL BE GOVERNED BY INPUT FROM TEMPERATURE SENSOR FOR AHU-2. IF SPACE TEMPERATURE IS BELOW 65°F, UNIT SHALL BE IN HEATING MODE AND PROVIDE A SUPPLY AIR TEMPERATURE OF 80°F (ADJ.). IF SPACE TEMP IS 65°F OR ABOVE, UNIT SHALL BE IN COOLING MODE AND PROVIDE A SUPPLY AIR TEMPERATUER OF 60°F (ADJ.).

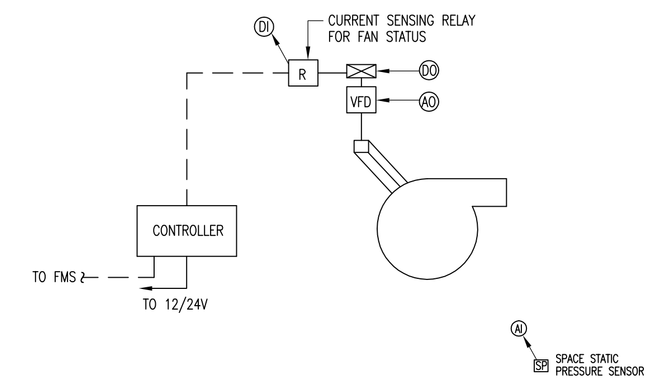

03 KITCHEN EXHAUST FAN CONTROL DIAGRAM

SCALE: N.T.S.
(TYPICAL OF KEF-1, -2, -3)

HALFF
5000 WEST MILITARY, SUITE 100
McALLEN, TEXAS 78503
TEL (956) 664-0286
FAX (956) 664-0282
Halff Associates firm registration number is 312

100% PRICING SET

REVISIONS

The Reese
Phase I
202 S. 1st. Street
Harlingen, TX

MECHANICAL
CONTROL DIAGRAMS

MEGAMORPHOSIS
- ARCHITECTURE & INTERIOR DESIGN
1409 N. STUART PLACE RD., SUITE D
PHONE #(956) 428-1779 FAX # (956) 425-5886

PROJECT #
27074
MAR. 26, 2010
M-4.2

ELECTRICAL GENERAL LEGEND

ALL SYMBOLS SHOWN MAY NOT APPEAR IN ALL DRAWINGS.
SYMBOLS ARE SHOWN SCHEMATIC AND MAY NOT BE TO SCALE.

SYMBOL	DESCRIPTION	MNTG. HT. UNO (SEE NOTE 1)
	LIGHTING	
	2'x4' FLUORESCENT LIGHT FIXTURE	SEE FIX. SCH.
	2'x4' FLUORESCENT LIGHT FIXTURE WITH EMERGENCY BATTERY	SEE FIX. SCH.
	2'x2' FLUORESCENT LIGHT FIXTURE	SEE FIX. SCH.
	2'x2' FLUORESCENT LIGHT FIXTURE WITH EMERGENCY BATTERY	SEE FIX. SCH.
	FLUORESCENT STRIP LIGHT	SEE FIX. SCH.
	FLUORESCENT STRIP LIGHT WITH EMERGENCY BATTERY	SEE FIX. SCH.
	1'X4' FLUORESCENT LIGHT FIXTURE	SEE FIX. SCH.
	1'X4' FLUORESCENT LIGHT FIXTURE WITH EMERGENCY BATTERY	SEE FIX. SCH.
	TRACK LIGHT WITH HEADS	SEE FIX. SCH.
	INCANDESCENT, FLUORESCENT, OR HID FIXTURE CLG. OR WALL MTD.	SEE FIX. SCH.
	INCANDESCENT, FLUORESCENT, OR HID FIXTURE WITH EMERGENCY BATTERY CLG. OR WALL MTD.	SEE FIX. SCH.
	EMERGENCY FIXTURE	SEE FIX. SCH.
	POLE MOUNTED FIXTURE	SEE FIX. SCH.
	EXIT LIGHT, CEILING OR WALL MOUNTED – SHADING INDICATING SINGLE OR DOUBLE FACE; DIRECTIONAL ARROWS AS INDICATED	9" BFC
$(X) SWITCH ID; $(X) # OF BUTTONS	DIGITAL SWITCH : Z-MAX #ZMDSW-X-X	48" AFF
$DM	DIMMER SWITCH	48" AFF
$3 OR $4 (3-WAY OR 4-WAY)	DUAL POLE OR SINGLE POLE SWEEP SWITCH. #AS-100-X.	48" AFF
$3	3-WAY SWEEP SWITCH : WATTSTOPPER #AS-100-X.	48" AFF
$OC1	WATTSTOPPER #DW-100 DUAL TECHNOLOGY WALL SWITCH SENSOR.	48" AFF
$OC2	WATTSTOPPER #DW-200 DUAL TECHNOLOGY DUAL RELAY WALL SWITCH SENSOR.	48" AFF
$(X) SWITCH ID LX	LOW VOLTAGE KEY SWITCH	48" AFF
$(X) SWITCH ID LV	LOW VOLTAGE SWITCH	48" AFF
OS	OCCUPANCY SENSOR – WATTSTOPPER #DT-355 DUAL TECHNOLOGY LINE VOLTAGE CEILING SENSOR – PROVIDE 4" OCTAGONAL J-BOX.	–
WS	DIMMING WALL STATION	–
	SECURITY SYSTEM	
DM	DOOR MONITOR	–
	CAMERA	–
CR	CARD READER	–
MD	MOTION DETECTOR	–
D	DOOR CONTACT	–
K	SECURITY KEYPAD	–
ERP	ENTRANCE ROOM PAGER	–
P	PANIC BUTTON	–
EPO	EMERGENCY POWER OFF BUTTON	

SYMBOL	DESCRIPTION	MNTG. HT. UNO (SEE NOTE 1)
	POWER	
	SINGLE RECEPTACLE – 20A/125V/1P/3W/G NEMA 5-20R	15" AFF
	DUPLEX RECEPTACLE – 20A/125V/1P/3W/G NEMA 5-20R	15" AFF
	220 RECEPTACLE – 20A/125V/1P/3W/G NEMA 5-20R	15" AFF
WP	DUPLEX RCPT. GFI/WATER PROOF – 20A/125V/1P/3W/G NEMA 5-20R	15" AFF
	QUADRAPLEX RECEPTACLE (TWO DUPLEX RCPTS. UNDER ONE COVERPLATE)	15" AFF
	ISOLATED GROUND QUADRAPLEX RECEPTACLE (TWO DUPLEX RCPTS. UNDER ONE COVERPLATE)	15" AFF
	ISOLATED GROUND DUPLEX RECEPTACLE – 20A/125V NEMA 5-20R	15" AFF
E	DUPLEX RECEPTACLE ON EMERGENCY CIRCUIT	15" AFF
	FLOOR MOUNTED DUPLEX RECEPTACLE – FLUSH MOUNTED UNO	–
	DUPLEX RCPT. SPLIT-WIRED – 20A/125V/1P/3W/G NEMA 5-20R	15" AFF
	SPECIAL PURPOSE RECEPTACLE (NEMA NO. OR RATING AS INDICATED)	15" AFF
J	JUNCTION BOX – SIZE & MOUNTING AS REQUIRED	15" AFF
	MULTIOUTLET ASSEMBLY – LENGTH AND OUTLET SPACING AS INDICATED	–
30/–/3	DISCONNECT SWITCH – 30/–/3 INDICATES 30A, 3-POLE, NONFUSED; 30/30/3 INDICATES 30A, 3-POLE, 30A FUSE	AS REQD.
CB 30/3	CIRCUIT BREAKER DISCONNECT SWITCH – THERMAL MAGNETIC CB IN NEMA 1 ENCL; AMPS/POLES AS INDICATED	AS REQD.
30/30/3	DISCONNECT SWITCH – 30/30/3 INDICATES 30A, 3-POLE, 30A FUSE	AS REQD.
2	MOTOR STARTER FVNR UNO; NUMBER INDICATES NEMA SIZE	AS REQD.
CB	COMBINATION MOTOR CONTROLLER/DISCONNECT SWITCH	AS REQD.
	PANELBOARD	–
	TRANSFORMER	–
	MSB	–
	TVSS (TYPE AS INDICATED)	–
	MOTOR	–
	SINGLE LINE CONTINUATION	–
	CIRCUIT HOME RUN TO PANELBOARD (2 #12, 1 #12G, 3/4"C. 20A/1P CB UNO)	–
X,X,X	THREE SINGLE POLE DEVICE CIRCUIT NUMBERS	–
X/X/X	MULTI-POLE DEVICE CIRCUIT NUMBERS	–
TV	TELEVISION OUTLET. CLG. OR WALL MOUNTED – STUB 3/4" C. ABOVE CEILING FROM OUTLET BOX TO CABLE TRAY	–
	PUSHBUTTON FOR INTERCOM CALL IN	48" AFF
	BUZZER/BELL	–
	TELEPHONE BOARD	–
TC	FIRE ALARM TERMINATION CABINATE	–
R	RELAY	–
FS	FIRE/SMOKE DAMPERS	–

SYMBOL	DESCRIPTION	MNTG. HT. UNO (SEE NOTE 1)
	FIRE ALARM	
DH	DOOR HOLDER OR DOOR RELEASE	–
F	FIRE ALARM PULL STATION	48" AFF
F	FIRE ALARM AUDIBLE/VISUAL SIGNAL	80" AFF
F	FIRE ALARM AUDIBLE SIGNAL	80" AFF
F	FIRE ALARM VISUAL SIGNAL	80" AFF
FS	FIRE ALARM SPRINKLER FLOW SWITCH	–
TS	FIRE ALARM SPRINKLER TAMPER SWITCH	–
S	FIRE ALARM SMOKE DETECTOR CEILING OR WALL MOUNTED	80" AFF
S H	COMBINTATION SMOKE AND HEAT DETECTOR	80" AFF
H	HEAT DETECTOR CEILING OR WALL MOUNTED	–
D	DUCT SMOKE DETECTOR	–
FACP	FIRE ALARM CONTROL PANEL	–
FAAP	FIRE ALARM ANNUNCIATOR PANEL	–
ARC	AREA OF RESCUE CALL	–
ARANN	AREA OF RESCUE ANNUNCIATOR	–
R	FIRE ALARM INTERFACE RELAY	–
FS	ADDRESSABLE FLOW SWITCH	–
	COMMUNICATION	
	TELEPHONE/DATA OUTLET. WALL MOUNTED – STUB 3/4" C. ABOVE ACCESSIBLE CEILING. NUMBER REPRESNTS QUANTITY OF DROPS REQUIRED	15" AFF
	TELEPHONE OUTLET. WALL MOUNTED – STUB 3/4" C. ABOVE ACCESSIBLE CEILING. NUMBER REPRESNTS QUANTITY OF DROPS REQUIRED	15" AFF
	DATA OUTLET. WALL MOUNTED – STUB 3/4" C. ABOVE ACCESSIBLE CEILING. NUMBER REPRESNTS QUANTITY OF DROPS REQUIRED	15" AFF
	FLOOR MOUNTED TELEPHONE/DATA OUTLET – FLUSH MOUNTED UNO	–
	FLOOR MOUNTED TELEPHONE OUTLET – FLUSH MOUNTED UNO	–
	FLOOR MOUNTED DATA OUTLET – FLUSH MOUNTED UNO	–
W	TELEPHONE OUTLET. WALL MOUNTED – STUB 3/4" C. ABOVE ACCESSIBLE CEILING	48" AFF
SC	SOUND CONSOLE (RACK)	–
S S	P.A. SPEAKER, CEILING OR WALL MOUNTED	9" BFC, UNO
M M	MICROPHONE OUTLET	–
DBL	CLOCK – SINGLE OR DOUBLE FACE	–
W	WIRELESS ACCESS POINT	–
R	SPRINKLER SYSTEM REGULATOR RELAY	–
ARC	AREA OF RESCUE CALL	–
ARANN	AREA OF RESCUE ANNUNCIATOR	–
FAEP	FIRE ALAM EXTENDED PANEL	–
VCP	VENTILATOR CONTROL PANEL	–

GENERAL ABBREVIATIONS

ABS	ABOVE BACK SPLASH	EX	EXISTING	MTD	MOUNT OR MOUNTED	NL	NIGHT LIGHT	SW	SWITCH
AFF	ABOVE FINISHED FLOOR	F	FUSE	NC (N.C.)	NORMALLY CLOSED	NO (N.O.)	NORMALLY OPEN	UF	UNDERFLOOR
BFC	BELOW FINISHED CEILING	G	GROUND (EQUIPMENT)	NF	NONFUSED	RCPT(S)	RECEPTACLE(S)	UG	UNDERGROUND
C	CONDUIT	GFI	GROUND FAULT INTERRUPTER	NIC	NOT IN CONTRACT	PNL	PANEL	WG	WIRE GUARD
CB	CIRCUIT BREAKER	IC	INTERRUPTING CAPACITY	TYP	TYPICAL	SO (S.O.)	SPACE ONLY	WP	WEATHERPROOF
CLG	CEILING	IG	ISOLATED GROUND	EP	ELECTRICAL PRIMARY	SP	SPARE	XFMR	TRANSFORMER
EC	EMPTY CONDUIT			EOL	END OF LINE	ST (S.T.)	SHUNT TRIP	UNO	UNLESS NOTED OTHERWISE

NOTES:
1. 48" AFF INDICATES TO TOP OF DEVICE;
   15" AFF INDICATES TO BOTTOM OF DEVICE;
   ALL OTHER MOUNTING HEIGHTS REFER TO CENTERLINE OF DEVICE.

01 ELECTRICAL GENERAL LEGEND
NTS

HALFF
5000 WEST MILITARY, SUITE 100
McALLEN, TEXAS 78503
TEL (956) 664-0286
FAX (956) 664-0282
Halff Associates firm registration number is 312

100% PRICING SET

REVISIONS

The Reese
Phase I
202 S. 1st. Street
Harlingen, TX

ELECTRICAL GENERAL LEGEND

MEGAMORPHOSIS
• ARCHITECTURE & INTERIOR DESIGN
1409 N. STUART PLACE RD., SUITE D
PHONE #(956) 428-1779 FAX # (956) 425-5886

PROJECT # 27074
MAR. 26, 2010
E-0.1

GENERAL NOTES:

(A) REFER TO ARCHITECTURAL REFLECTED CEILING PLAN (RCP) FOR EXACT LOCATION OF LIGHT FIXTURES. FURNISH FIXTURES WITH TRIM COMPATIBLE WITH THE TYPE OF CEILING AS INDICATED ON THE RCP.

(B) CONNECT EXIT/EMERCENCY LIGHTS AND EMERGENCY BALLASTS IN EMERGENCY LIGHTS IN EACH SPACE TO UNSWITCHED HOT LEG OF LOCAL LIGHTING CIRCUIT. RE: DETAIL 03/E-7.2.

(C) COORDINATE PLACEMENT OF FIXTURES WITH ACTUAL INSTALLATION OF MECHANICAL EQUIPMENT AND DUCTWORK.

(D) ALL CONTROL AND POWER WIRING FOR LIGHTING CONTROL SYSTEM SHALL BE IN CONDUIT.

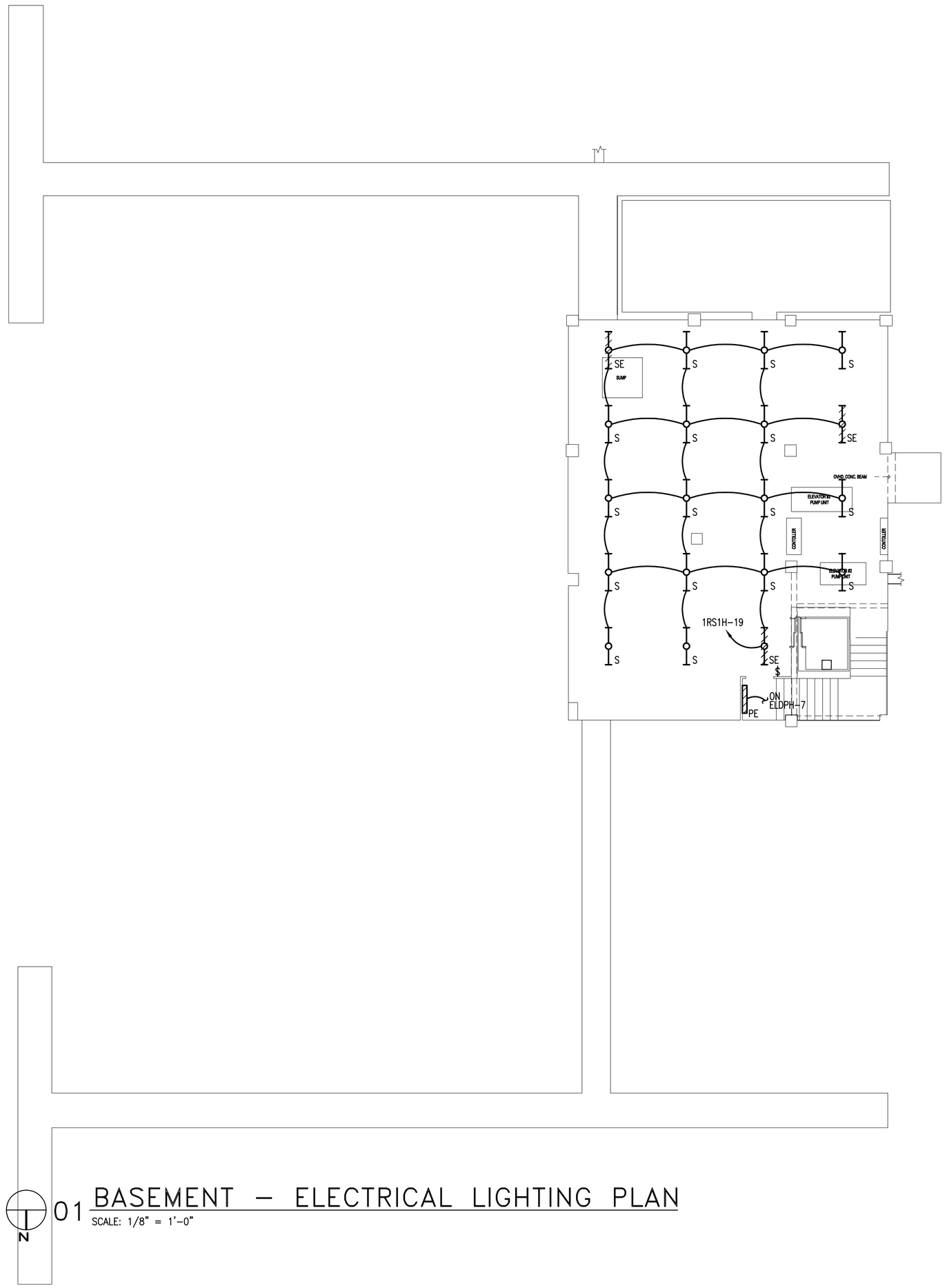

01 BASEMENT – ELECTRICAL LIGHTING PLAN
SCALE: 1/8" = 1'-0"

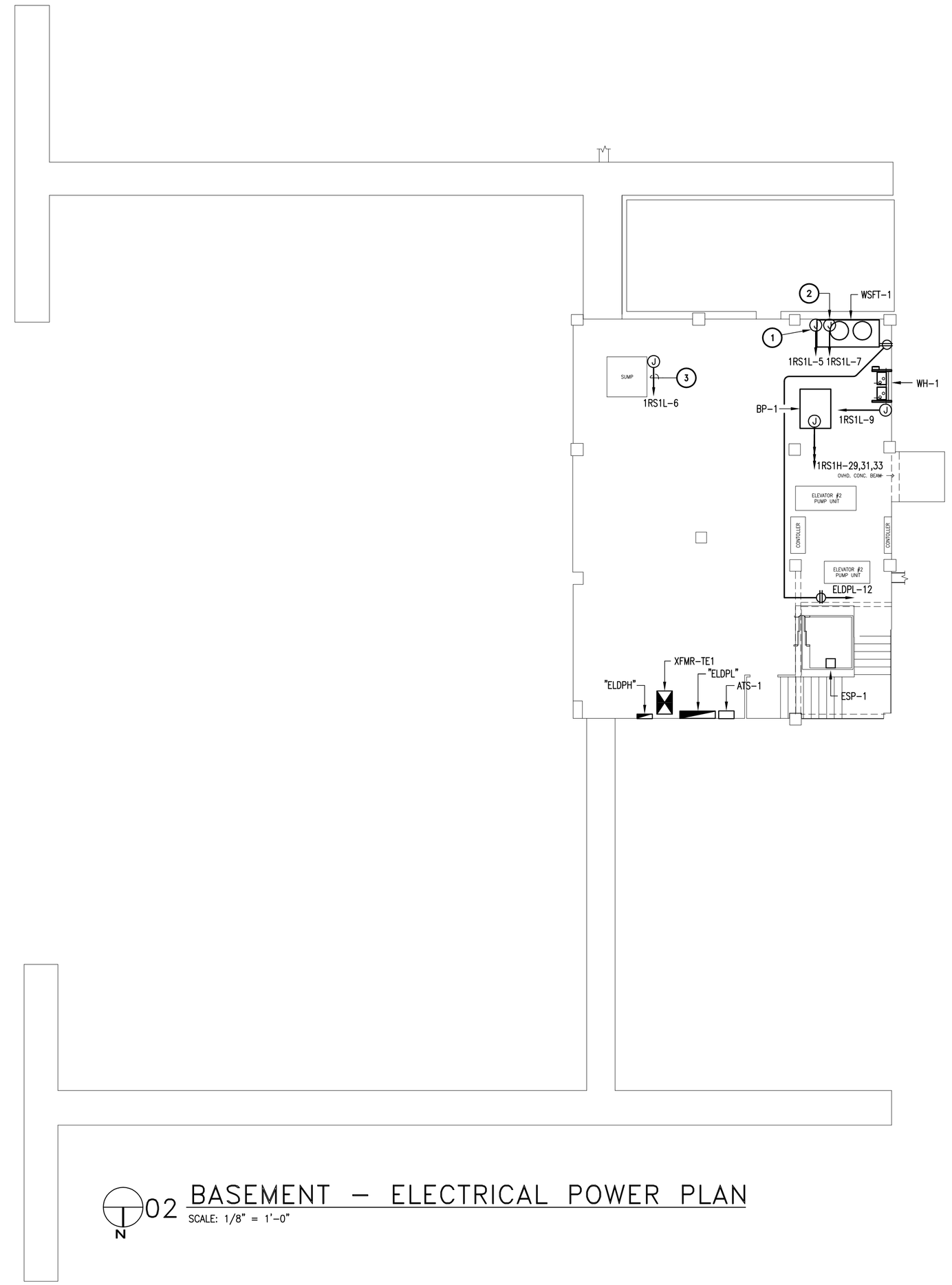

02 BASEMENT – ELECTRICAL POWER PLAN
SCALE: 1/8" = 1'-0"

KEY NOTES:

1. POWER FOR WATER SOFTNER CONTROLLER.
2. POWER FOR REVERSE OSMOSIS SYSTEM.
3. FURNISH AND INSTALL ALL CONNECTIONS FOR FLOAT SWITCHES, PUMPS, AND ALARMS ASSOCIATED TO LIFT STATIONS.

100% PRICING SET

HALFF
5000 WEST MILITARY, SUITE 100
McALLEN, TEXAS 78503
TEL (956) 664-0286
FAX (956) 664-0282
Halff Associates firm registration number is 312

REVISIONS

The Reese
Phase I
202 S. 1st. Street
Harlingen, TX

BASEMENT ELECTRICAL LIGHTING/POWER PLAN

MEGAMORPHOSIS
• ARCHITECTURE & INTERIOR DESIGN
1409 N. STUART PLACE RD., SUITE D
PHONE # (956) 428-1779 FAX # (956) 425-5886

PROJECT # 27074
MAR. 26, 2010
E-1.0

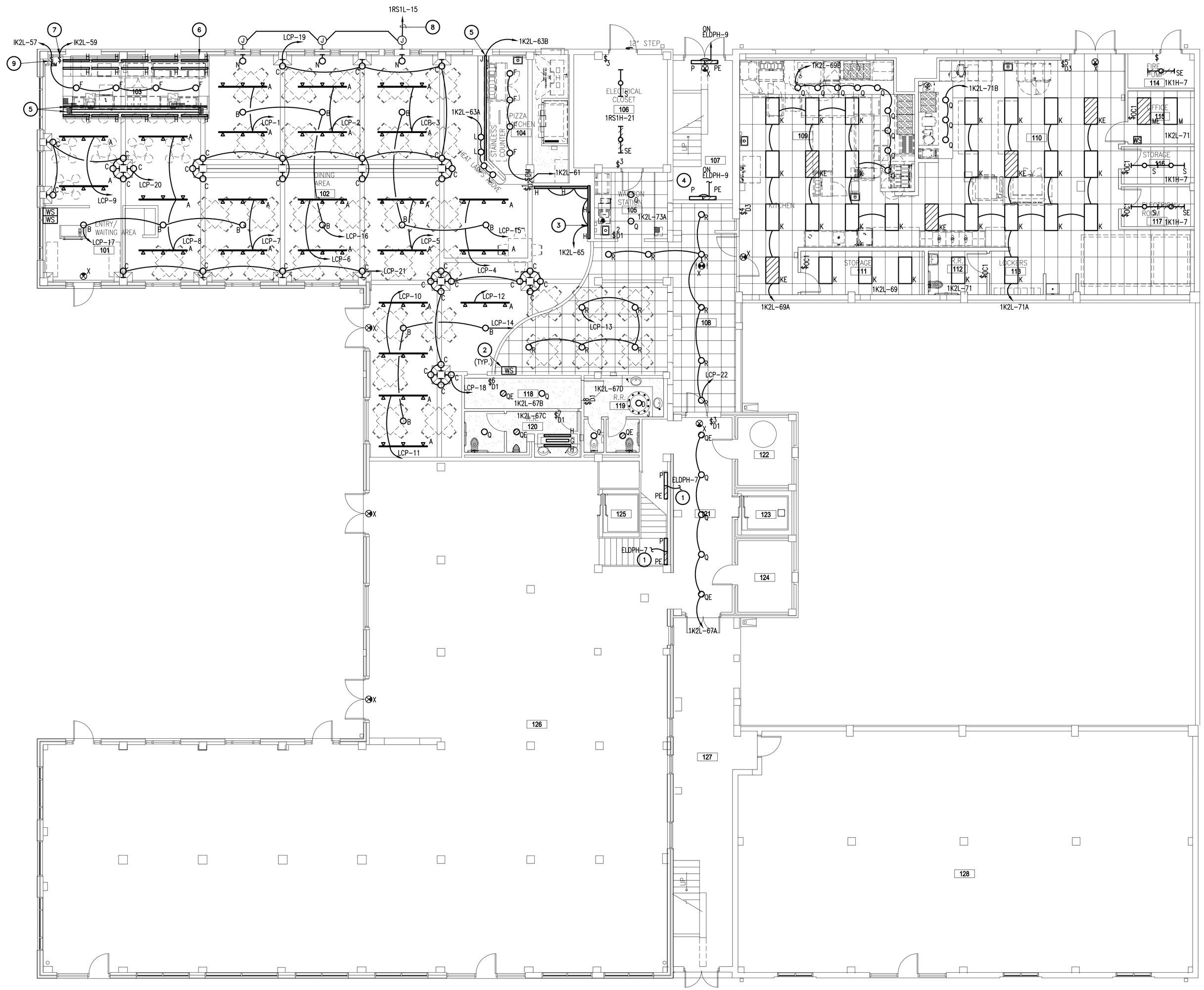

01 FIRST FLOOR – ELECTRICAL LIGHTING PLAN

SCALE: 1/8" = 1'-0"

GENERAL NOTES:

(A) REFER TO ARCHITECTURAL REFLECTED CEILING PLAN (RCP) FOR EXACT LOCATION OF LIGHT FIXTURES. FURNISH FIXTURES WITH TRIM COMPATIBLE WITH THE TYPE OF CEILING AS INDICATED ON THE RCP.

(B) CONNECT EXIT/EMERGENCY LIGHTS AND EMERGENCY BALLASTS IN EMERGENCY LIGHTS IN EACH SPACE TO UNSWITCHED HOT LEG OF LOCAL LIGHTING CIRCUIT. RE: DETAIL 03/E-7.2.

(C) COORDINATE PLACEMENT OF FIXTURES WITH ACTUAL INSTALLATION OF MECHANICAL EQUIPMENT AND DUCTWORK.

(D) WHERE DUAL LEVEL SWITCHING IS INDICATED IN A SPACE WITH 3-LAMP FLUORESCENT FIXTURES, PROVIDE BALLASTS IN ALL FIXTURES AND WIRING TO ALLOW FOR SWITCHING OF MIDDLE LAMPS INDEPENDENTLY OF OUTER LAMPS.

(E) SWITCH LEGS ARE NOT SHOWN WHERE DIGITAL SWITCHES ARE USED TO CONTROL LIGHTS. REFER TO DETAIL 07/E-7.2 FOR WIRING OF DIGITAL SWITCHES.

(F) CONTRACTOR SHALL INCLUDE IN HIS BID TO OWNER THE COST OF ALL CONTROL PANELS, DEVICES, NETWORK CABLING AND LOW OR LINE VOLTAGE WIRING FOR A COMPLETE LIGHTING CONTROL SYSTEM AS SPECIFIED. REFER TO MANUFACTURERS WIRING DIAGRAMS AND INSTALLATION MANUALS PRIOR TO BID.

(G) CONTROL SYSTEM FOR LIGHTING IS DESIGNED TO MEET 2003 INTERNATIONAL ENERGY CONSERVATION CODE. ALL LIGHT SWITCHES SHALL OPERATE AS BOTH MANUAL AND AUTOMATIC LINE VOLTAGE SWITCHES OR AS MOMENTARY DIGITAL SWITCHES IN CONJUNCTION WITH RELAY CONTROL PANELS, UNLESS OTHERWISE NOTED.

(H) REFER TO LIGHTING CONTROL RELAY SCHEDULE, SHEET E-6.4, FOR CIRCUITING OF LIGHT SWITCHES AND LIGHT FIXTURES THROUGH RELAYS IN LIGHTING RELAY PANELS. RE: DETAIL 02/E-6.4.

(I) ALL CONTROL AND POWER WIRING FOR LIGHTING CONTROL SYSTEM SHALL BE IN CONDUIT.

(J) ALL DIMMING CIRCUITS ROUTED TO DIMMING CONTROL PANEL 'LCP'. REFER TO DIMMING CONTROL PANEL SCHEDULE DETAIL 03/E-6.4.

KEY NOTES:

1. FURNISH AND INSTALL QTY. (2) 'P' LIGHT FIXTURES IN STAIRCASE AT FIRST FLOOR THROUGH FIFTH FLOOR IN THE SAME SCHEME AS SHOWN IN THIS SHEET. CIRCUIT TO EMERGENCY CIRCUIT ELDPH-7. FIXTURE TO REMAIN ON AT ALL TIMES.
2. LUTRON P/N SD-4SN-WH-EGN DIMMING WALL STATION. MOUNT 48" AFF. PROVIDE WITH SINGLE GANG BOX.
3. FLUORESCENT STRIPS FOR BACK-LIT CUTWOOD SCREEN.
4. FURNISH AND INSTALL QTY. (2) 'P' LIGHT FIXTURES IN STAIRCASE AT FIRST FLOOR THROUGH FIFTH FLOOR IN THE SAME SCHEME AS SHOWN IN THIS SHEET. CIRCUIT TO EMERGENCY CIRCUIT ELDPH-9. FIXTURE TO REMAIN ON AT ALL TIMES.
5. ROUTE TYPE 'J' ULTRA FLEX ROPE LIGHT UNDERNEATH BAR COUNTER. COORDINATE WITH ARCHITECTURAL SECTION VIEW DETAILS.
6. COORDINATE FINAL MOUNTING LOCATION OF FLUORESCENT STRIPS FOR BAR AREA WITH ARCHITECTURAL SECTION VIEW DETAILS.
7. FOR CONTROL OF BAR LIGHTING, MOUNT SINGLE POLE SWITCH 48" AFF.
8. SOLENOID VALVES FOR AUTOMATIC SHUTOFF OF GAS TO LANTERNS TO BE PROVIDED BY DIVISION 15, INSTALLED ABOVE CEILING. PROVIDE 120V CIRCUIT FOR POWER.
9. MATCH APPROPRIATE WALL BOX DIMMER WITH BALLAST.

100% PRICING SET

HALFF
5000 WEST MILITARY, SUITE 100
McALLEN, TEXAS 78503
TEL (956) 664-0286
FAX (956) 664-0282
Halff Associates firm registration number is 312

REVISIONS

The Reese
Phase I
202 S. 1st. Street
Harlingen, TX

FIRST FLOOR
ELECTRICAL LIGHTING PLAN

MEGAMORPHOSIS
- ARCHITECTURE & INTERIOR DESIGN
1409 N. STUART PLACE RD., SUITE D
PHONE # (956) 428-1779 FAX # (956) 425-5886

PROJECT # 27074
MAR. 26, 2010
E-1.1

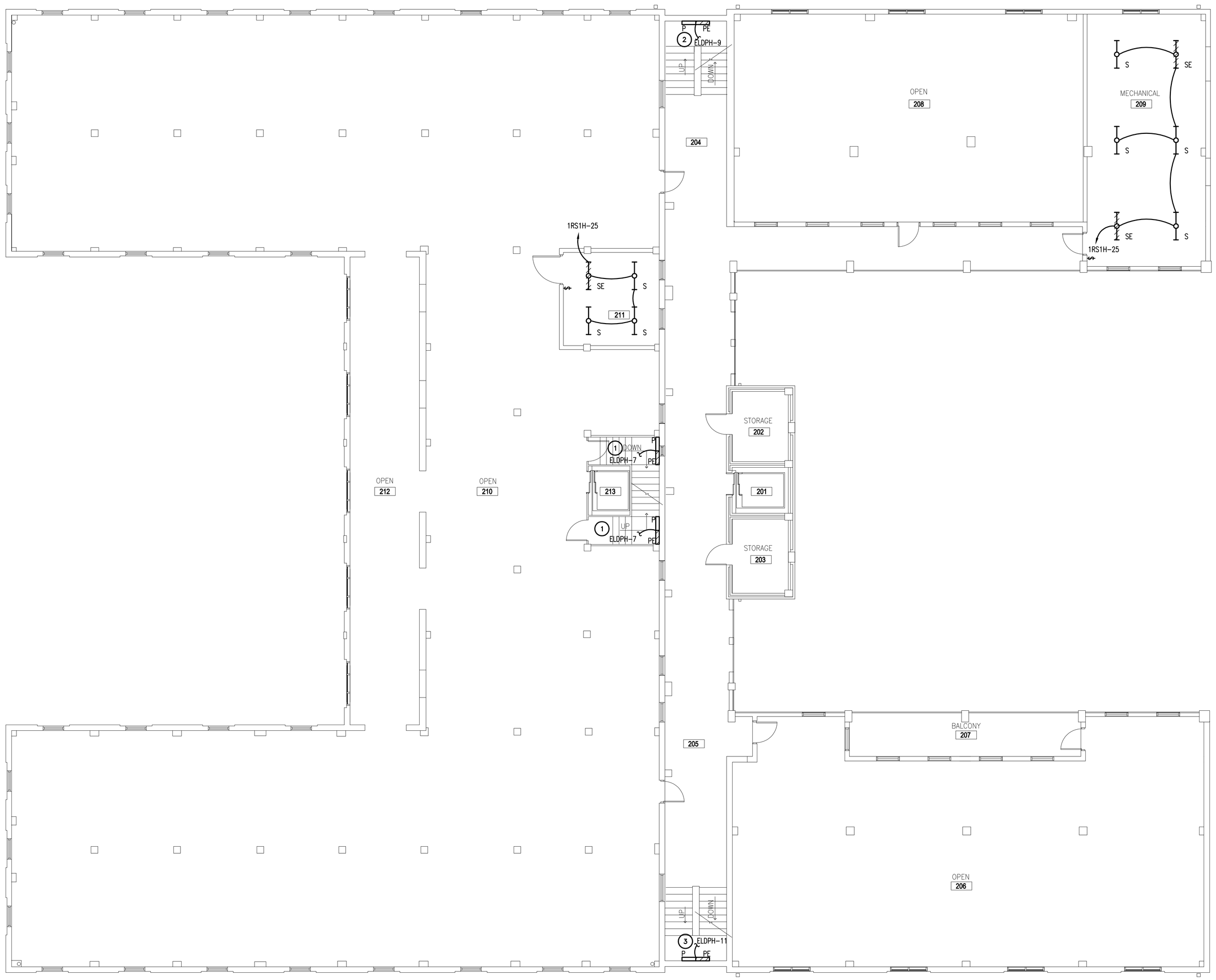

01 SECOND FLOOR – ELECTRICAL LIGHTING PLAN

SCALE: 1/8" = 1'-0"

GENERAL NOTES:

(A) REFER TO ARCHITECTURAL REFLECTED CEILING PLAN (RCP) FOR EXACT LOCATION OF LIGHT FIXTURES. FURNISH FIXTURES WITH TRIM COMPATIBLE WITH THE TYPE OF CEILING AS INDICATED ON THE RCP.

(B) CONNECT EXIT/EMERGENCY LIGHTS AND EMERGENCY BALLASTS IN EMERGENCY LIGHTS IN EACH SPACE TO UNSWITCHED HOT LEG OF LOCAL LIGHTING CIRCUIT. RE: DETAIL 03/E-7.2.

(C) COORDINATE PLACEMENT OF FIXTURES WITH ACTUAL INSTALLATION OF MECHANICAL EQUIPMENT AND DUCTWORK.

(D) ALL CONTROL AND POWER WIRING FOR LIGHTING CONTROL SYSTEM SHALL BE IN CONDUIT.

KEY NOTES:

1. FURNISH AND INSTALL QTY. (2) 'P' LIGHT FIXTURES IN STAIRCASE AT FIRST FLOOR THROUGH FIFTH FLOOR IN THE SAME SCHEME AS SHOWN IN THIS SHEET. CIRCUIT TO EMERGENCY CIRCUIT ELDPH-7. FIXTURE TO REMAIN ON AT ALL TIMES.
2. FURNISH AND INSTALL QTY. (2) 'P' LIGHT FIXTURES IN STAIRCASE AT FIRST FLOOR THROUGH FIFTH FLOOR IN THE SAME SCHEME AS SHOWN IN THIS SHEET. CIRCUIT TO EMERGENCY CIRCUIT ELDPH-9. FIXTURE TO REMAIN ON AT ALL TIMES.
3. FURNISH AND INSTALL QTY. (2) 'P' LIGHT FIXTURES IN STAIRCASE AT FIRST FLOOR THROUGH FIFTH FLOOR IN THE SAME SCHEME AS SHOWN IN THIS SHEET. CIRCUIT TO EMERGENCY CIRCUIT ELDPH-11. FIXTURE TO REMAIN ON AT ALL TIMES.

100% PRICING SET

HALFF
5000 WEST MILITARY, SUITE 100
McALLEN, TEXAS 78503
TEL (956) 664-0286
FAX (956) 664-0282
Halff Associates firm registration number is 312

REVISIONS

The Reese
Phase I
202 S. 1st. Street
Harlingen, TX

SECOND FLOOR
ELECTRICAL LIGHTING PLAN

MEGAMORPHOSIS
- ARCHITECTURE & INTERIOR DESIGN
1409 N. STUART PLACE RD., SUITE D
PHONE #(956) 428-1779 FAX # (956) 425-5886

PROJECT # 27074

MAR. 26, 2010

E-1.2

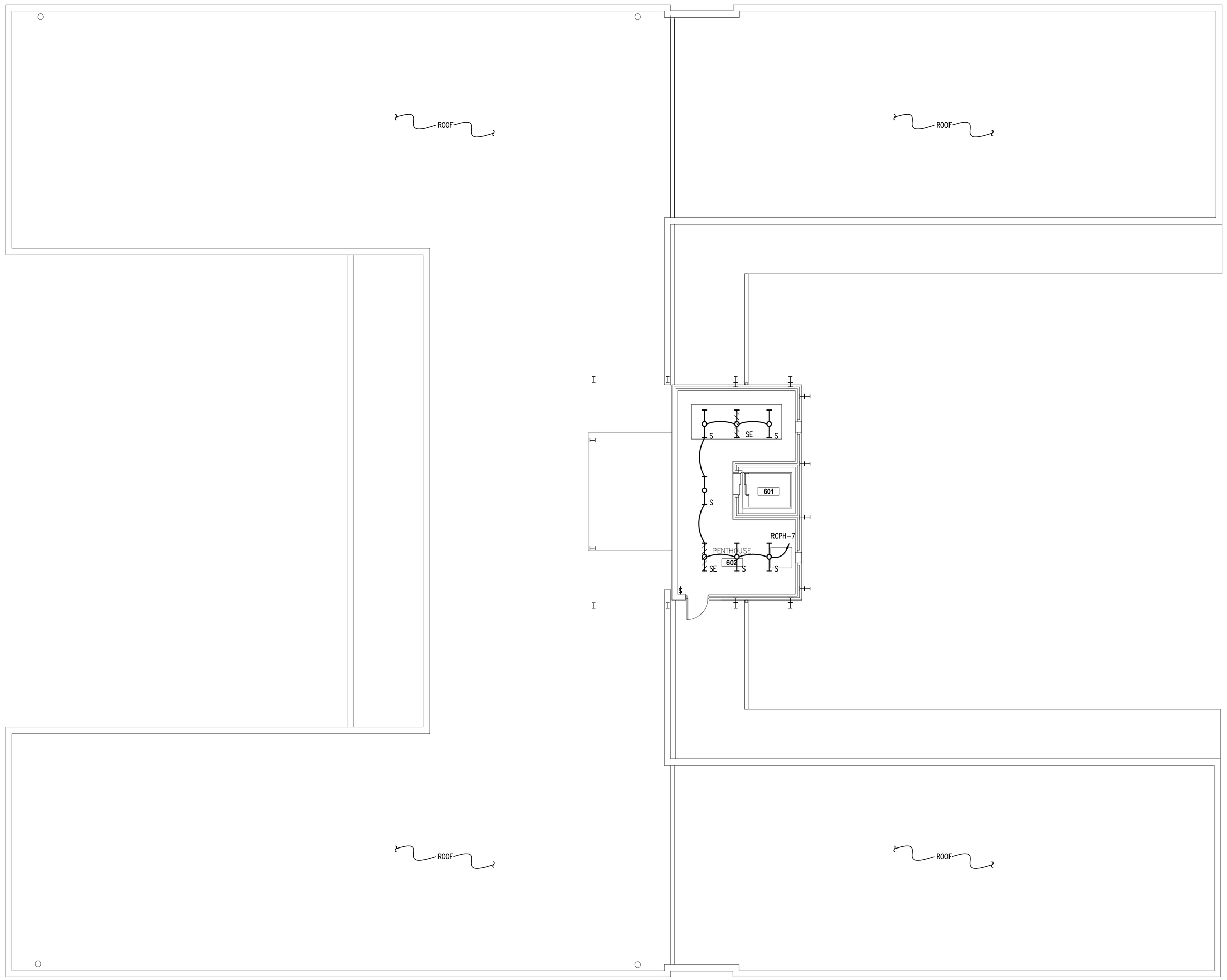

01 PENTHOUSE – ELECTRICAL LIGHTING PLAN
SCALE: 1/8" = 1'-0"

N

GENERAL NOTES:

(A) REFER TO ARCHITECTURAL REFLECTED CEILING PLAN (RCP) FOR EXACT LOCATION OF LIGHT FIXTURES. FURNISH FIXTURES WITH TRIM COMPATIBLE WITH THE TYPE OF CEILING AS INDICATED ON THE RCP.

(B) CONNECT EXIT/EMERGENCY LIGHTS AND EMERGENCY BALLASTS IN EMERGENCY LIGHTS IN EACH SPACE TO UNSWITCHED HOT LEG OF LOCAL LIGHTING CIRCUIT. RE: DETAIL 03/E-7.2.

(C) COORDINATE PLACEMENT OF FIXTURES WITH ACTUAL INSTALLATION OF MECHANICAL EQUIPMENT AND DUCTWORK.

(D) WHERE DUAL LEVEL SWITCHING IS INDICATED IN A SPACE WITH 3-LAMP FLUORESCENT FIXTURES, PROVIDE BALLASTS IN ALL FIXTURES AND WIRING TO ALLOW FOR SWITCHING OF MIDDLE LAMPS INDEPENDENTLY OF OUTER LAMPS.

(E) SWITCH LEGS ARE NOT SHOWN WHERE DIGITAL SWITCHES ARE USED TO CONTROL LIGHTS. REFER TO DETAIL 07/E-7.2 FOR WIRING OF DIGITAL SWITCHES.

(F) CONTRACTOR SHALL INCLUDE IN HIS BID TO OWNER THE COST OF ALL CONTROL PANELS, DEVICES, NETWORK CABLING AND LOW OR LINE VOLTAGE WIRING FOR A COMPLETE LIGHTING CONTROL SYSTEM AS SPECIFIED. REFER TO MANUFACTURERS WIRING DIAGRAMS AND INSTALLATION MANUALS PRIOR TO BID.

(G) CONTROL SYSTEM FOR LIGHTING IS DESIGNED TO MEET 2003 INTERNATIONAL ENERGY CONSERVATION CODE. ALL LIGHT SWITCHES SHALL OPERATE AS BOTH MANUAL AND AUTOMATIC LINE VOLTAGE SWITCHES OR AS MOMENTARY DIGITAL SWITCHES IN CONJUNCTION WITH RELAY CONTROL PANELS, UNLESS OTHERWISE NOTED.

(H) REFER TO LIGHTING CONTROL RELAY SCHEDULE, SHEET E-6.4, FOR CIRCUITING OF LIGHT SWITCHES AND LIGHT FIXTURES THROUGH RELAYS IN LIGHTING RELAY PANELS. RE: DETAIL 02/E-6.4.

(I) ALL CONTROL AND POWER WIRING FOR LIGHTING CONTROL SYSTEM SHALL BE IN CONDUIT.

(J) ALL DIMMING CIRCUITS ROUTED TO DIMMING CONTROL PANEL 'LCP'. REFER TO DIMMING CONTROL PANEL SCHEDULE DETAIL 03/E-6.4.

HALFF
5000 WEST MILITARY, SUITE 100
McALLEN, TEXAS 78503
TEL (956) 664-0286
FAX (956) 664-0282
Halff Associates firm registration number is 312

100% PRICING SET

REVISIONS

The Reese
Phase I
202 S. 1st. Street
Harlingen, TX

PENTHOUSE
ELECTRICAL LIGHTING PLAN

MEGAMORPHOSIS
- ARCHITECTURE & INTERIOR DESIGN
1409 N. STUART PLACE RD., SUITE D
PHONE #(956) 428-1779 FAX # (956) 425-5886

PROJECT # 27074
MAR. 26, 2010
E-1.6

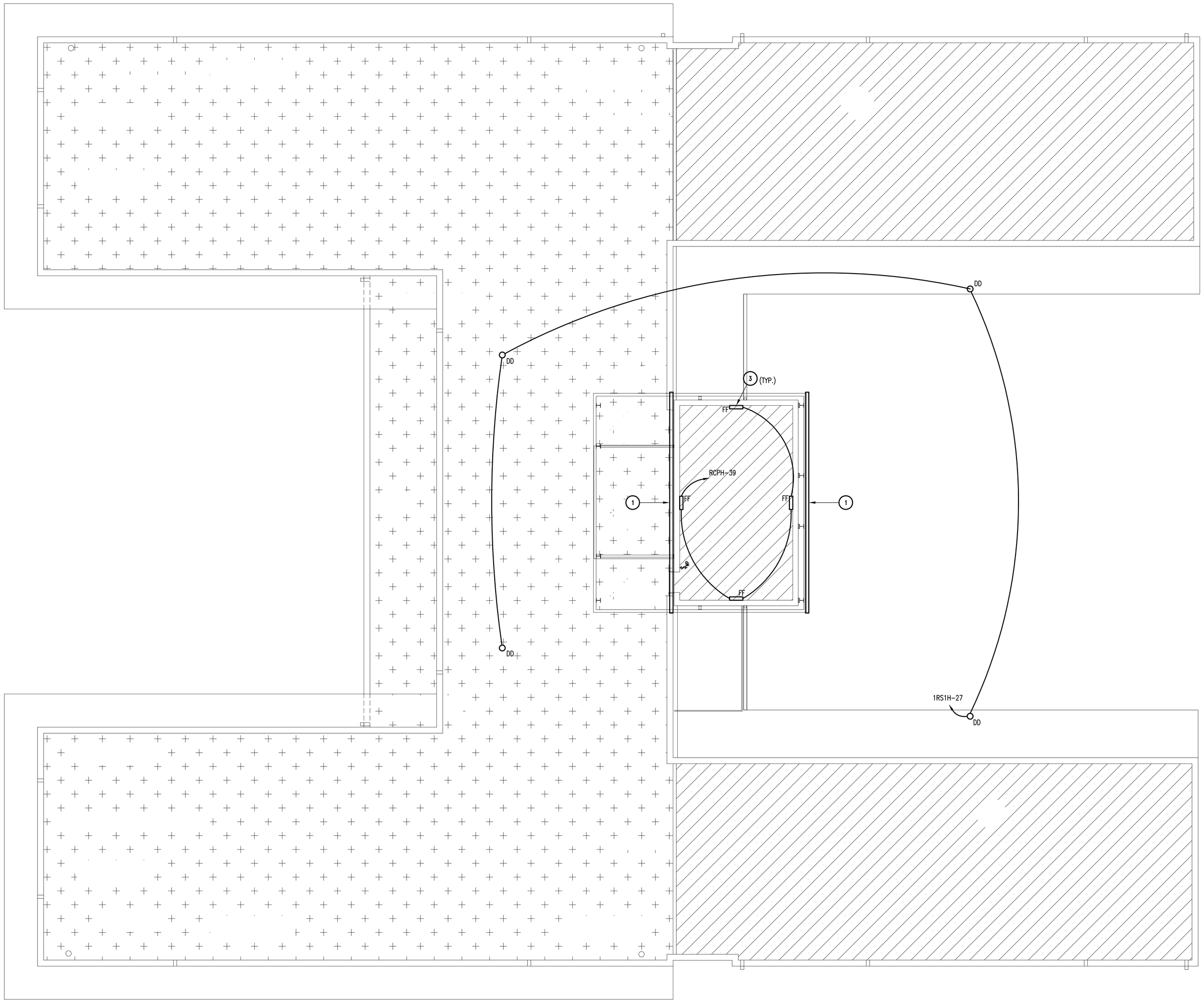

01 ROOF – ELECTRICAL LIGHTING PLAN
SCALE: 1/8" = 1'-0"

GENERAL NOTES:

(A) REFER TO ARCHITECTURAL REFLECTED CEILING PLAN (RCP) FOR EXACT LOCATION OF LIGHT FIXTURES. FURNISH FIXTURES WITH TRIM COMPATIBLE WITH THE TYPE OF CEILING AS INDICATED ON THE RCP.

(B) CONNECT EXIT/EMERGENCY LIGHTS AND EMERGENCY BALLASTS IN EMERGENCY LIGHTS IN EACH SPACE TO UNSWITCHED HOT LEG OF LOCAL LIGHTING CIRCUIT. RE: DETAIL 03/E-7.2.

(C) COORDINATE PLACEMENT OF FIXTURES WITH ACTUAL INSTALLATION OF MECHANICAL EQUIPMENT AND DUCTWORK.

(D) WHERE DUAL LEVEL SWITCHING IS INDICATED IN A SPACE WITH 3-LAMP FLUORESCENT FIXTURES, PROVIDE BALLASTS IN ALL FIXTURES AND WIRING TO ALLOW FOR SWITCHING OF MIDDLE LAMPS INDEPENDENTLY OF OUTER LAMPS.

(E) SWITCH LEGS ARE NOT SHOWN WHERE DIGITAL SWITCHES ARE USED TO CONTROL LIGHTS. REFER TO DETAIL 07/E-7.2 FOR WIRING OF DIGITAL SWITCHES.

(F) CONTRACTOR SHALL INCLUDE IN HIS BID TO OWNER THE COST OF ALL CONTROL PANELS, DEVICES, NETWORK CABLING AND LOW OR LINE VOLTAGE WIRING FOR A COMPLETE LIGHTING CONTROL SYSTEM AS SPECIFIED. REFER TO MANUFACTURERS WIRING DIAGRAMS AND INSTALLATION MANUALS PRIOR TO BID.

(G) CONTROL SYSTEM FOR LIGHTING IS DESIGNED TO MEET 2003 INTERNATIONAL ENERGY CONSERVATION CODE. ALL LIGHT SWITCHES SHALL OPERATE AS BOTH MANUAL AND AUTOMATIC LINE VOLTAGE SWITCHES OR AS MOMENTARY DIGITAL SWITCHES IN CONJUNCTION WITH RELAY CONTROL PANELS, UNLESS OTHERWISE NOTED.

(H) REFER TO LIGHTING CONTROL RELAY SCHEDULE, SHEET E-6.4, FOR CIRCUITING OF LIGHT SWITCHES AND LIGHT FIXTURES THROUGH RELAYS IN LIGHTING RELAY PANELS. RE: DETAIL 02/E-6.4.

(I) ALL CONTROL AND POWER WIRING FOR LIGHTING CONTROL SYSTEM SHALL BE IN CONDUIT.

(J) ALL DIMMING CIRCUITS ROUTED TO DIMMING CONTROL PANEL 'LCP'. REFER TO DIMMING CONTROL PANEL SCHEDULE DETAIL 03/E-6.4.

KEY NOTES:

1. BUILDING SIGN "THE REESE".
2. FOR ILLUMINATION OF BUILDING SIGN, MOUNT LIGHT FIXTURE TO 5TH FLOOR BALCONY ROOF. ADJUST FIXTURE PLACEMENT AND AIM ANGLE FOR UNIFORM LIGHT COVERAGE ON FACE OF SIGN. CONTROL VIA TIME CLOCK AND PHOTOCELL.
3. MOUNT FIXTURE TYPE 'FF' 6-INCHES BELOW WALL.
4. FOR ILLUMINATION OF BUILDING SIGN, MOUNT LIGHT FIXTURE TO ROOF. ADJUST FIXTURE PLACEMENT AND AIM ANGLE FOR UNIFORM LIGHT COVERAGE ON FACE OF SIGN. CONTROL VIA TIME CLOCK AND PHOTOCELL.

100% PRICING SET

HALFF
5000 WEST MILITARY, SUITE 100
McALLEN, TEXAS 78503
TEL (956) 664-0286
FAX (956) 664-0282
Halff Associates firm registration number is 312

REVISIONS

The Reese
Phase I
202 S. 1st. Street
Harlingen, TX

ROOF ELECTRICAL LIGHTING PLAN

MEGAMORPHOSIS
- ARCHITECTURE & INTERIOR DESIGN
1409 N. STUART PLACE RD., SUITE D
PHONE #(956) 428-1779 FAX # (956) 425-5866

PROJECT # 27074
MAR. 26, 2010
E-1.7

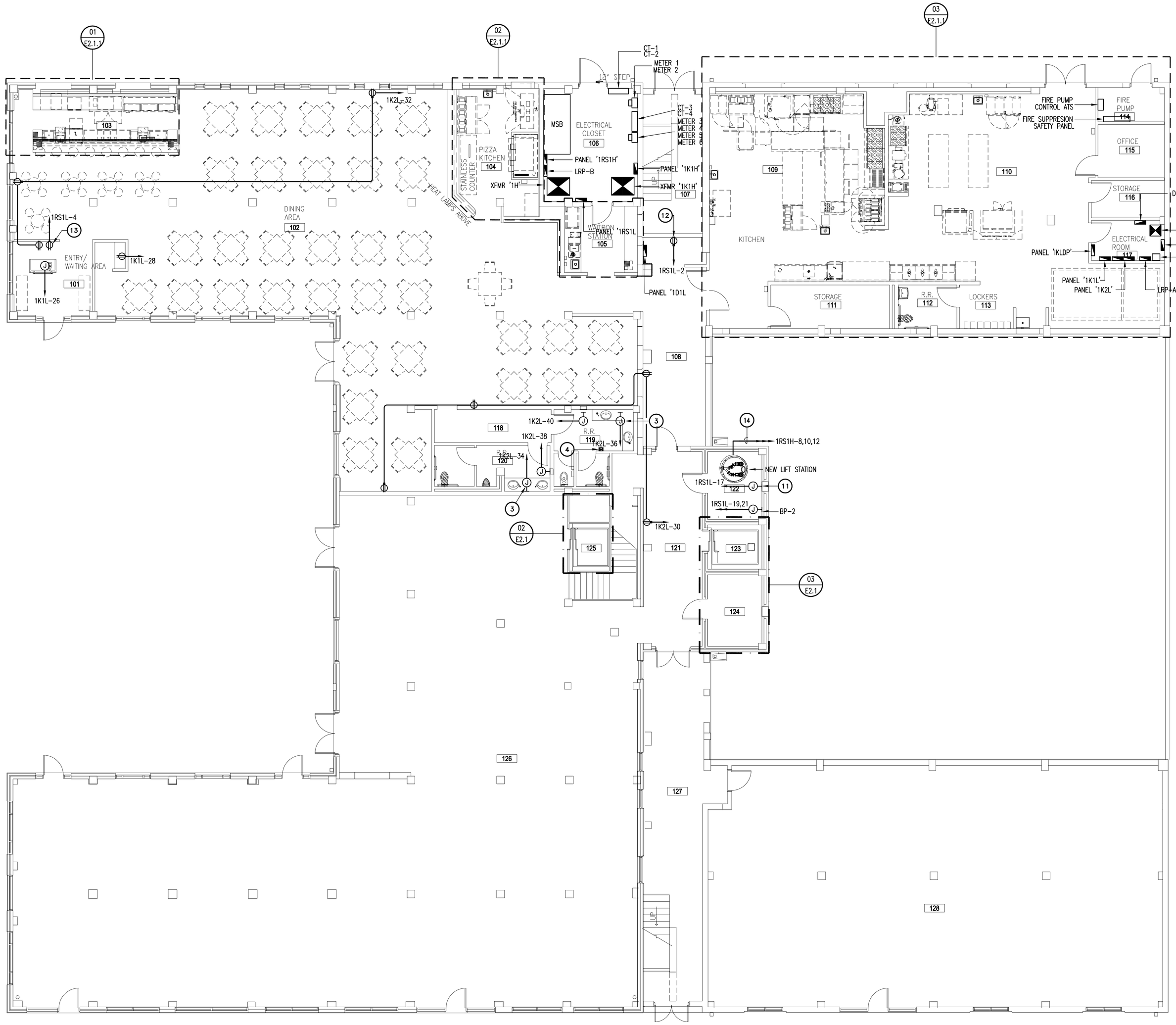

01 FIRST FLOOR – ELECTRICAL POWER PLAN
SCALE: 1/8" = 1'-0"

GENERAL NOTES:

(A) MOUNTING HEIGHT OF DEVICES AS PER PROJECT SPECIFICATIONS UNLESS NOTED OTHERWISE.

(B) COORDINATE ROUGH-IN LOCATION OF ALL DEVICES WITH ARCHITECTURAL ELEVATIONS DETAILS, AND PLANS.

(C) REFER TO ARCHITECTURAL MILLWORK AND ELEVATION PLANS FOR EXACT LOCATION AND MOUNTING HEIGHT OF ALL WIRING DEVICES.

(D) ALL PENETRATIONS THROUGH FIRE RATED WALLS SHALL HAVE SOUND RETARDING/ABSORBING FIRE STOP MATERIAL.

(E) FURNISH AND INSTALL TV OUTLET AND TV RECEPTACLE IN SEPARATE BACKBOX AND WALL PLATE.

KEY NOTES:

1. BUSSMAN POWER MODULE. CAT #PS1T48R2KGA OR EQUAL.
2. FURNISH AND INSTALL SWITCH WITH LOCKING COVER.
3. FURNISH AND INSTALL A JUNCTION BOX, ACCESSIBLE ABOVE THE CEILING FOR ELECTRICAL SERVICE TO AUTOMATIC PLUMBING FIXTURE TRANSFORMER. MAKE FINAL CONNECTIONS TO TRANSFORMER BY PLUMBING CONTRACTOR.
4. FURNISH AND INSTALL TR-75KVA TRANSFORMER ACCESSIBLE ABOVE CEILING FOR LINEAR ACCENT ROPE LIGHT FIXTURE TYPE 'J'. REFER TO FIXTURE SCHEDULE.
5. PROVIDE DESIGNATED 120V, 20A RECEPTACLE FOR SUMP PUMP. DO NOT PROVIDE WITH GFCI PROTECTION.
6. REFER TO DETAIL 04/E-7.1 FOR ELECTRICAL SCHEMATIC OF ALL THE DEVICES IN THIS SPACE.
7. HOIST LIGHT SWITCH. LOCATE 3' ABOVE TOP OF LANDING. COORDINATE LOCATION WITH ELEVATOR CONTRACTOR.
8. PROVIDE PERMANENTLY GUARDED LIGHT FIXTURE TO PREVENT CONTACT AND ACCIDENTAL BREAKAGE.
9. REMOTE INDICATOR LIGHT. REFER TO 04/E7.1.
10. NEW CENTIPRO ENVIRONMENT PROTECTION PANEL BY DIVISION 15. WIRING BY DIVISION 16.
11. POWER FOR DUPLEX POM.
12. POWER FOR FIRE ALARM CONTROL PANEL.
13. POWER FOR FIRE ALARM ANNUNCIATOR PANEL.
14. FURNISH AND INSTALL ALL CONNECTIONS FOR FLOAT SWITCHES, PUMPS, AND ALARMS ASSOCIATED TO LIFT STATIONS.

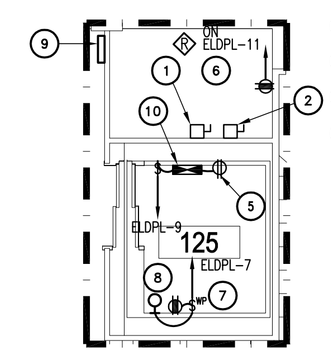

02 ELECTRICAL ENLARGED ELEVATOR DETAIL
SCALE: 1/4" = 1'-0"

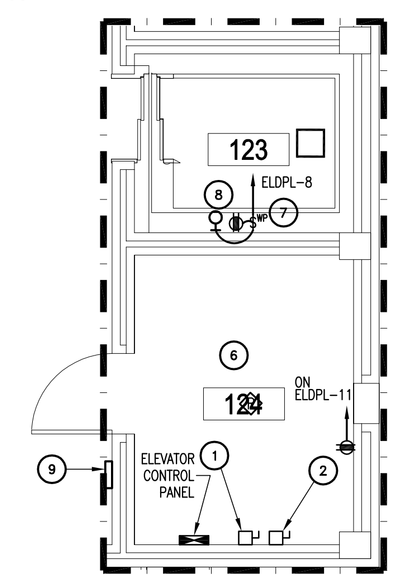

03 ELECTRICAL ENLARGED ELEVATOR DETAIL
SCALE: 1/4" = 1'-0"

100% PRICING SET

HALFF
5000 WEST MILITARY, SUITE 100
McALLEN, TEXAS 78503
TEL (956) 664-0286
FAX (956) 664-0282
Halff Associates firm registration number is 312

REVISIONS

The Reese
Phase I
202 S. 1st. Street
Harlingen, TX

FIRST FLOOR
ELECTRICAL POWER PLAN

MEGAMORPHOSIS
- ARCHITECTURE & INTERIOR DESIGN
1409 N. STUART PLACE RD., SUITE D
PHONE #(956) 428-1779 FAX # (956) 425-5866

PROJECT # 27074
MAR. 26, 2010
E-2.1

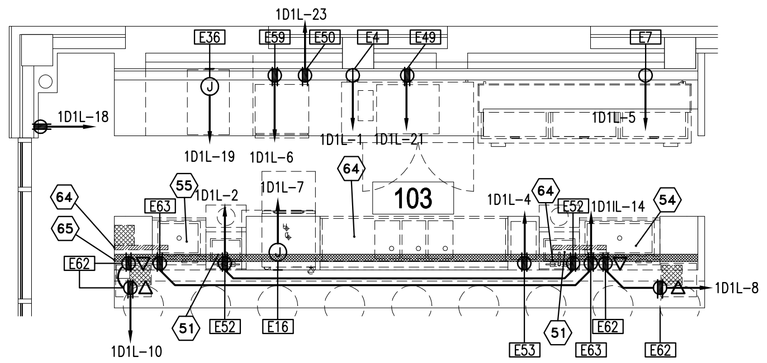

FIRST FLOOR – ELECTRICAL PARTIAL POWER PLAN

01 SCALE: 1/4" = 1'-0"

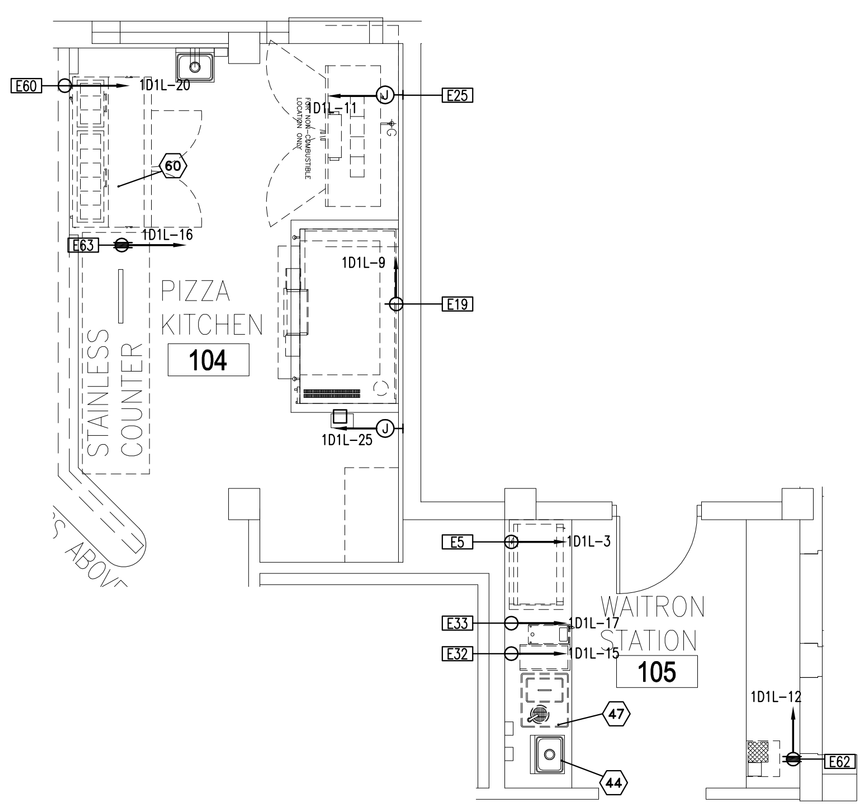

FIRST FLOOR – ELECTRICAL PARTIAL POWER PLAN

02 SCALE: 1/4" = 1'-0"

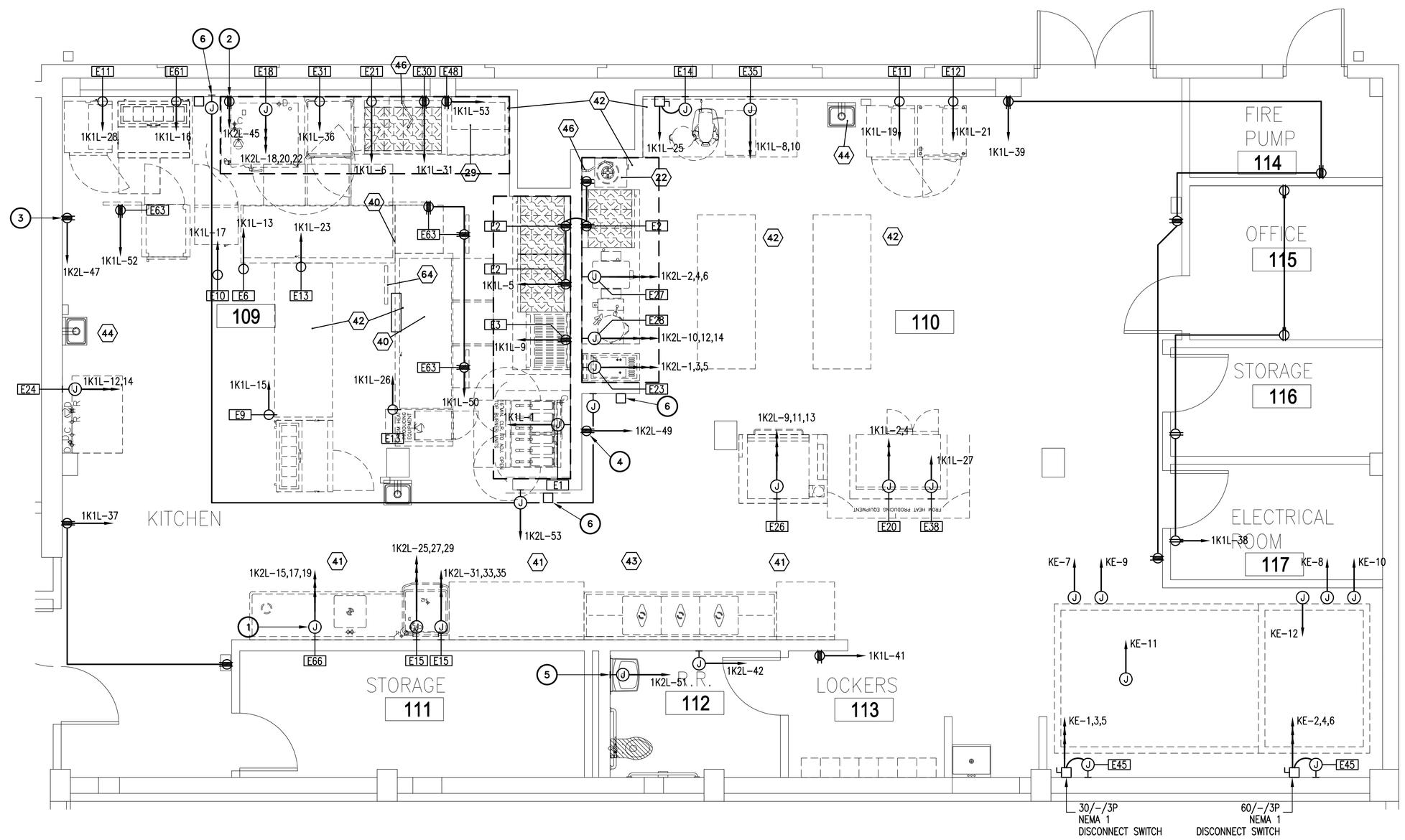

FIRST FLOOR – ELECTRICAL PARTIAL POWER PLAN

03 SCALE: 1/4" = 1'-0"

DRAWING NOTE:

XXX – KITCHEN EQUIPMENT ITEM TAG: USE ITEM TAG NUMBER TO CROSSREFERENCE ELECTRICAL ROUGH-IN INFORMATION IN PANEL SCHEDULES AND KITCHEN EQUIPMENT ELECTRICAL CONNECTION SCHEDULES TO KITCHEN EQUIPMENT SHOWN ON THIS SHEET.

XX KITCHEN ITEMS WITH NO POWER REQUIREMENTS.

GENERAL NOTES:

(A) MOUNTING HEIGHT OF DEVICES AS PER PROJECT SPECIFICATIONS UNLESS NOTED OTHERWISE.

(B) COORDINATE ROUGH-IN LOCATION OF ALL DEVICES WITH ARCHITECTURAL ELEVATIONS DETAILS, AND PLANS.

(C) REFER TO ARCHITECTURAL MILLWORK AND ELEVATION PLANS FOR EXACT LOCATION AND MOUNTING HEIGHT OF ALL WIRING DEVICES.

(D) ALL PENETRATIONS THROUGH FIRE RATED WALLS SHALL HAVE SOUND RETARDING/ABSORBING FIRE STOP MATERIAL.

(E) REFER TO KITCHEN EQUIPMENT ELECTRICAL CONNECTION SCHEDULE SHEET E-6.3 FOR EQUIPMENT WIRING REQUIREMENTS.

(F) ELECTRICAL CONTRACTOR SHALL REFER TO FOOD SERVICE DRAWINGS FOR ADDITIONAL ELECTRICAL REQUIREMENTS AND INSTALLATION DETAILS.

(G) ALL 20A, 120V RECEPTACLES IN KITCHEN AREAS SHALL BE OF GFCI TYPE OR BE CONNECTED TO CIRCUIT PROTECTED BY GFI BREAKER, UNLESS OTHERWISE NOTED.

(H) ALL CIRCUITS SERVING EQUIPMENT BENEATH KITCHEN EXHAUST HOOD MUST EXTEND TO BREAKERS WITH SHUNT TRIP BREAKERS IN PANEL BOX FOR SHUTDOWN OF EQUIPMENT DURING FIRE MODE, UNLESS OTHERWISE NOTED.

KEY NOTES:

1. POWER FOR FOOD WASTE DISPOSER.
2. POWER FOR HOOD CONTROL PANEL, KH-1.
3. POWER FOR HOOD CONTROL PANEL, KH-2.
4. POWER FOR HOOD CONTROL PANEL, KH-3.
5. FURNISH AND INSTALL A JUNCTION BOX, ACCESSIBLE ABOVE THE CEILING FOR ELECTRICAL SERVICE TO AUTOMATIC PLUMBING FIXTURE TRANSFORMER. MAKE FINAL CONNECTIONS TO TRANSFORMER BY PLUMBING CONTRACTOR.
6. FURNISH AND INSTALL MANUAL PULL STATION FOR THE KITCHEN FIRE SUPPRESSION SYSTEM. REFER TO DETAIL 01/E7.3.

HALFF
5000 WEST MILITARY, SUITE 100
McALLEN, TEXAS 78503
TEL (956) 664-0286
FAX (956) 664-0282
Halff Associates firm registration number is 312

100% PRICING SET

REVISIONS

The Reese
Phase I
202 S. 1st. Street
Harlingen, TX

FIRST FLOOR PARTIAL ELECTRICAL POWER PLANS

MEGAMORPHOSIS
• ARCHITECTURE & INTERIOR DESIGN
1409 N. STUART PLACE RD., SUITE D
PHONE # (956) 428-1779 FAX # (956) 425-5886

PROJECT # 27074
MAR. 26, 2010
E-2.1.1

GENERAL NOTES:

(A) MOUNTING HEIGHT OF DEVICES AS PER PROJECT SPECIFICATIONS UNLESS NOTED OTHERWISE.

(B) COORDINATE ROUGH-IN LOCATION OF ALL DEVICES WITH ARCHITECTURAL ELEVATIONS DETAILS, AND PLANS.

(C) REFER TO ARCHITECTURAL MILLWORK AND ELEVATION PLANS FOR EXACT LOCATION AND MOUNTING HEIGHT OF ALL WIRING DEVICES.

(D) ALL PENETRATIONS THROUGH FIRE RATED WALLS SHALL HAVE SOUND RETARDING/ABSORBING FIRE STOP MATERIAL.

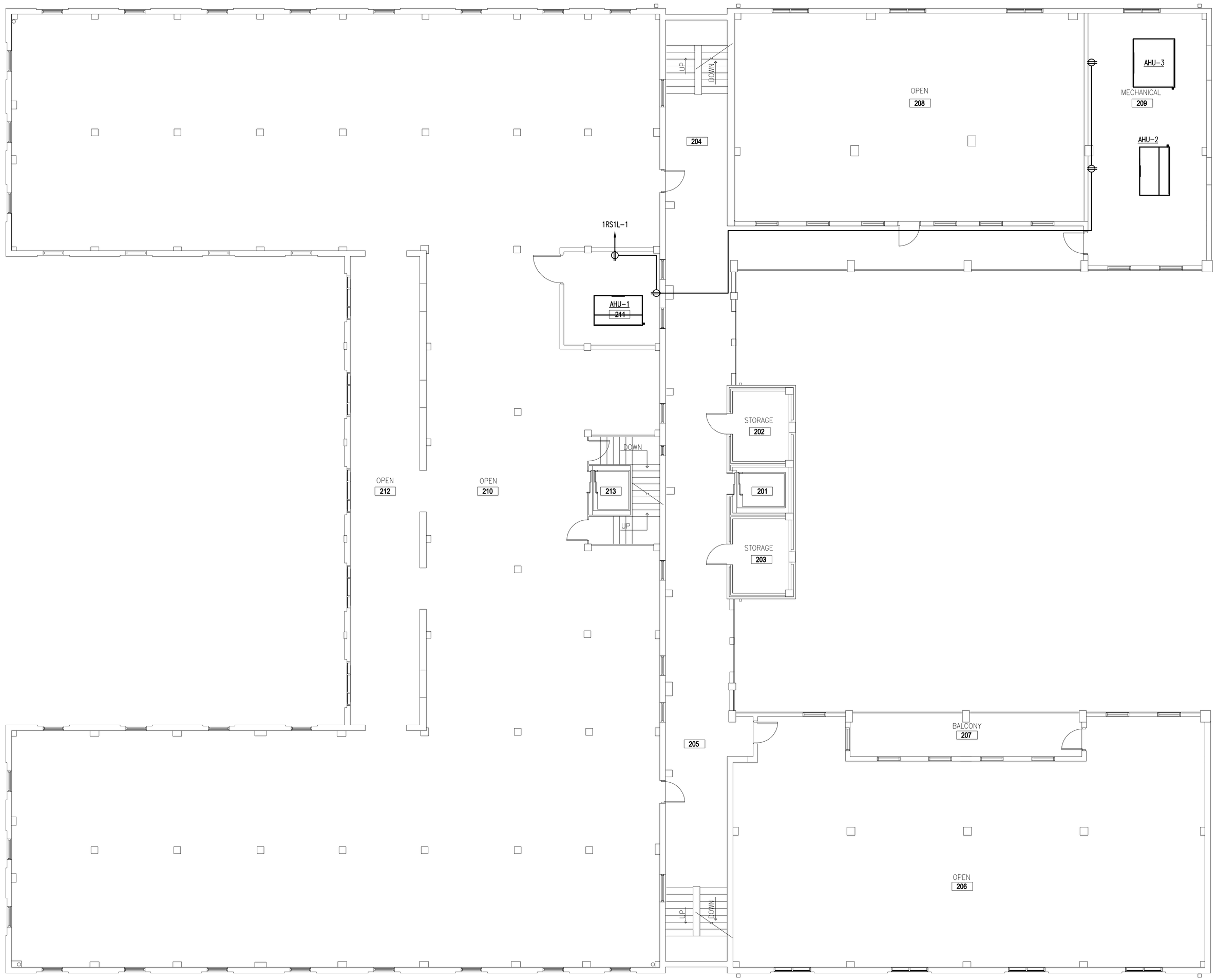

01 SECOND FLOOR – ELECTRICAL POWER PLAN

SCALE: 1/8" = 1'-0"

N

HALFF

5000 WEST MILITARY, SUITE 100
McALLEN, TEXAS 78503
TEL (956) 664-0286
FAX (956) 664-0282

Halff Associates firm registration number is 312

100% PRICING SET

REVISIONS

The Reese
Phase I
202 S. 1st. Street
Harlingen, TX

SECOND FLOOR
ELECTRICAL POWER PLAN

MEGAMORPHOSIS
• ARCHITECTURE & INTERIOR DESIGN
1400 N. STUART PLACE RD., SUITE D
PHONE # (956) 428-1779 FAX # (956) 425-5886

PROJECT #
27074

MAR. 26, 2010

E-2.2

GENERAL NOTES:

(A) MOUNTING HEIGHT OF DEVICES AS PER PROJECT SPECIFICATIONS UNLESS NOTED OTHERWISE.

(B) COORDINATE ROUGH-IN LOCATION OF ALL DEVICES WITH ARCHITECTURAL ELEVATIONS DETAILS, AND PLANS.

(C) REFER TO ARCHITECTURAL MILLWORK AND ELEVATION PLANS FOR EXACT LOCATION AND MOUNTING HEIGHT OF ALL WIRING DEVICES.

(D) ALL PENETRATIONS THROUGH FIRE RATED WALLS SHALL HAVE SOUND RETARDING/ABSORBING FIRE STOP MATERIAL.

(E) FURNISH AND INSTALL TV OUTLET AND TV RECEPTACLE IN SEPARATE BACKBOX AND WALL PLATE.

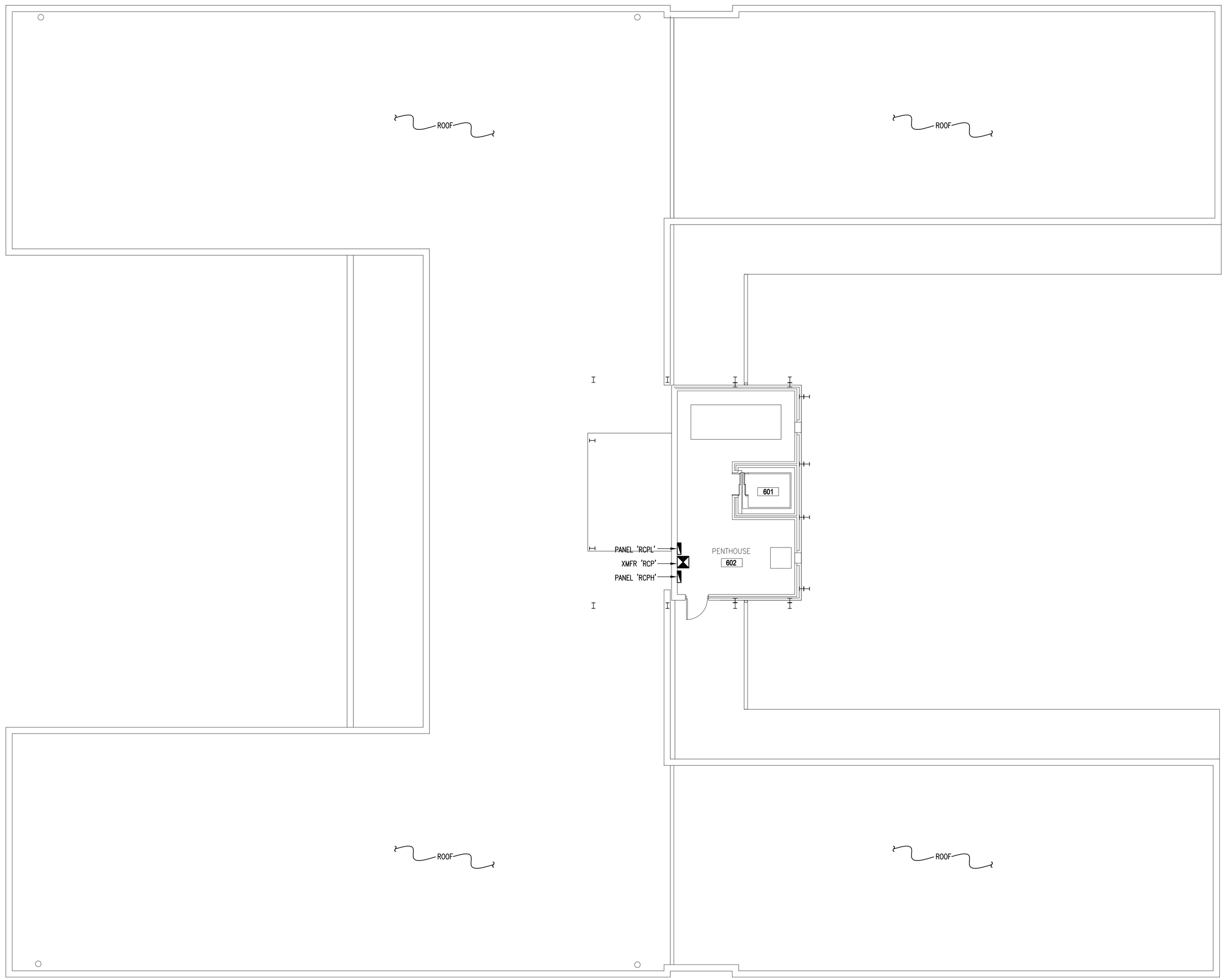

01 PENTHOUSE – ELECTRICAL POWER PLAN

SCALE: 1/8" = 1'-0"

N

HALFF
5000 WEST MILITARY, SUITE 100
McALLEN, TEXAS 78503
TEL (956) 664-0286
FAX (956) 664-0282
Halff Associates firm registration number is 312

100% PRICING SET

REVISIONS

The Reese
Phase I
202 S. 1st. Street
Harlingen, TX

PENTHOUSE
ELECTRICAL POWER PLAN

MEGAMORPHOSIS
- ARCHITECTURE & INTERIOR DESIGN
1409 N. STUART PLACE RD., SUITE D
PHONE #(956) 428-1779 FAX # (956) 425-5866

PROJECT # 27074

MAR. 26, 2010

E-2.6

GENERAL NOTES:()

(A) MOUNTING HEIGHT OF DEVICES AS PER PROJECT SPECIFICATIONS UNLESS NOTED OTHERWISE.

(B) COORDINATE ROUGH-IN LOCATION OF ALL DEVICES WITH ARCHITECTURAL ELEVATIONS DETAILS, AND PLANS.

(C) REFER TO ARCHITECTURAL MILLWORK AND ELEVATION PLANS FOR EXACT LOCATION AND MOUNTING HEIGHT OF ALL WIRING DEVICES.

(D) ALL PENETRATIONS THROUGH FIRE RATED WALLS SHALL HAVE SOUND RETARDING/ABSORBING FIRE STOP MATERIAL.

KEY NOTES:

1. LIGHTNING PROTECTION SYSTEM ON ROOF. PER SPECIFICATION SECTION 13100.

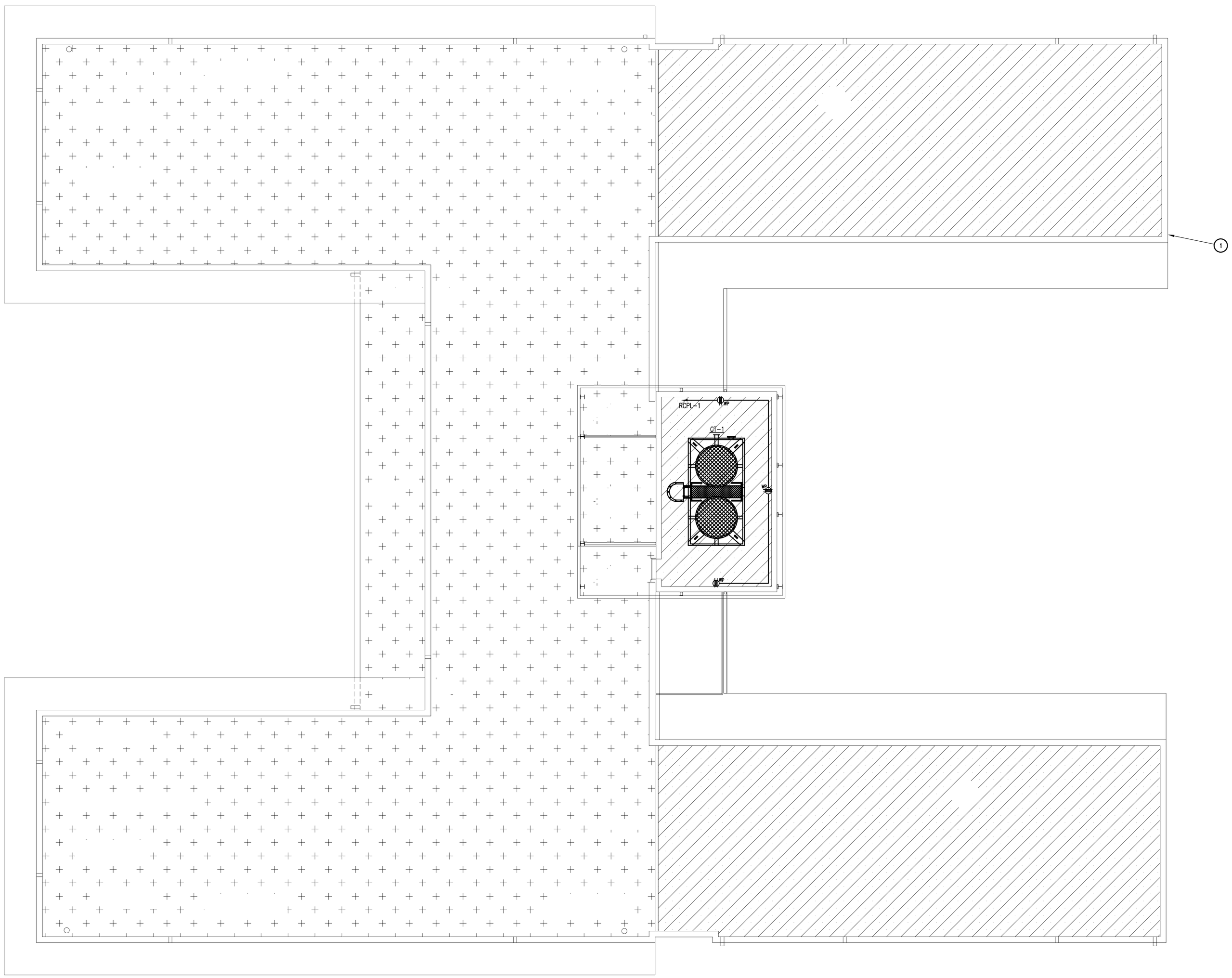

01 ROOF – ELECTRICAL POWER PLAN
SCALE: 1/8" = 1'-0"

HALFF
5000 WEST MILITARY, SUITE 100
McALLEN, TEXAS 78503
TEL (956) 664-0286
FAX (956) 664-0282
Halff Associates firm registration number is 312

100% PRICING SET

REVISIONS

The Reese
Phase I
202 S. 1st. Street
Harlingen, TX

ROOF ELECTRICAL POWER PLAN

MEGAMORPHOSIS
- ARCHITECTURE & INTERIOR DESIGN
1409 N. STUART PLACE RD., SUITE D
PHONE #(956) 428-1779 FAX # (956) 425-5886

PROJECT # 27074

MAR. 26, 2010

E-2.7

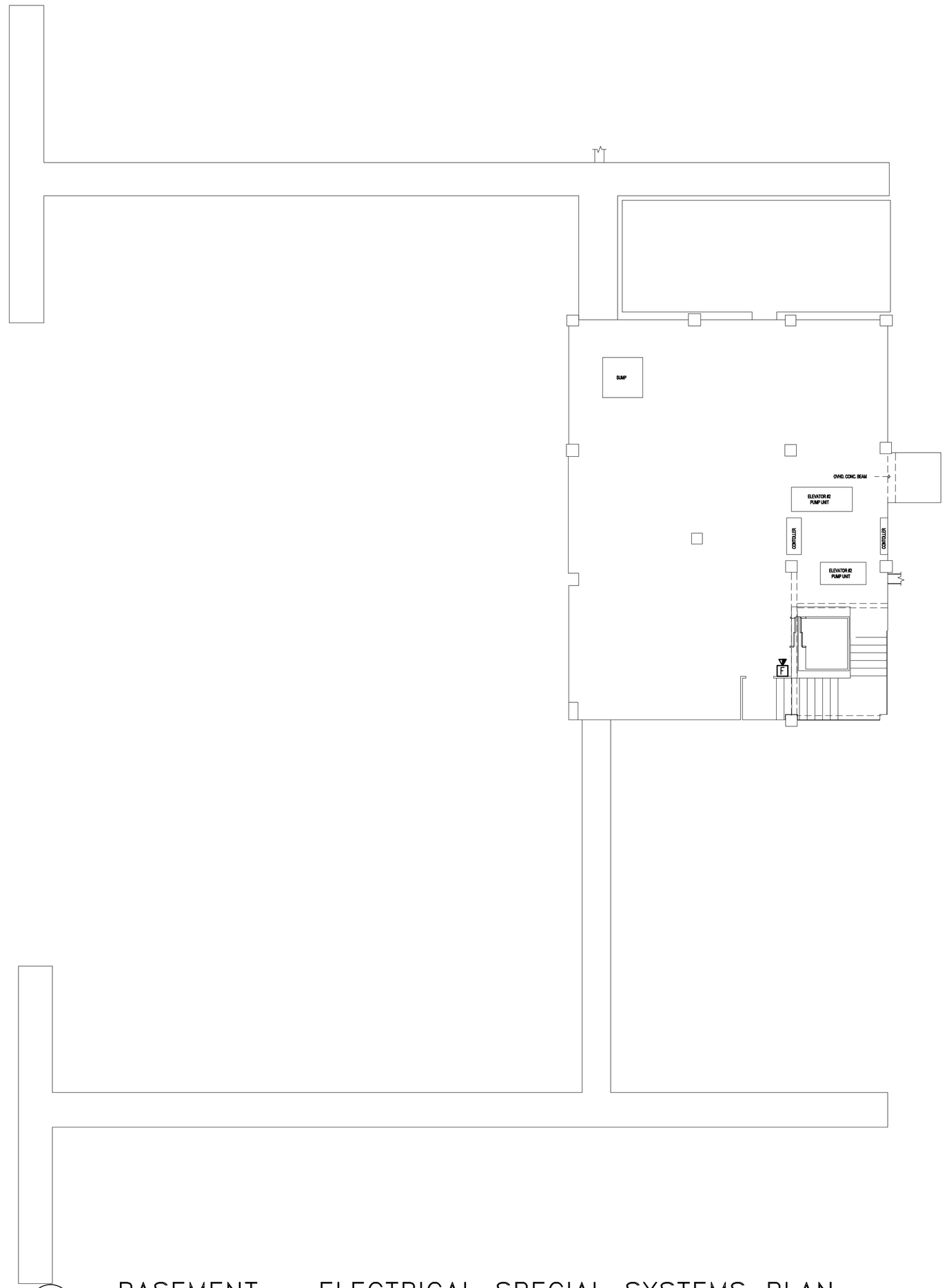

01 BASEMENT – ELECTRICAL SPECIAL SYSTEMS PLAN
SCALE: 1/8" = 1'-0"

N

100% PRICING SET

HALFF
5000 WEST MILITARY, SUITE 100
McALLEN, TEXAS 78503
TEL (956) 664-0286
FAX (956) 664-0282
Halff Associates firm registration number is 312

REVISIONS

The Reese
Phase I
202 S. 1st. Street
Harlingen, TX

BASEMENT ELECTRICAL
SPECIAL SYSTEMS PLAN

MEGAMORPHOSIS
• ARCHITECTURE & INTERIOR DESIGN
1409 N. STUART PLACE RD., SUITE D
PHONE # (956) 428-1779 FAX # (956) 425-5886

PROJECT #
27074
MAR. 26, 2010
E-3.0

GENERAL NOTES:

(A) REFER TO ELECTRICAL LEGEND, SHEET E-0.1, FOR MOUNTING HEIGHT OF FIRE ALARM/SECURITY DEVICES.

(B) COORDINATE ROUGH-IN LOCATION OF ALL DEVICES WITH ARCHITECTURAL ELEVATIONS DETAILS, AND PLANS.

(C) REFER TO ARCHITECTURAL MILLWORK AND ELEVATION PLANS FOR EXACT LOCATION AND MOUNTING HEIGHT OF ALL WIRING DEVICES.

(D) ALL FIRE ALARM, INTERCOM, DATA, AND TV DEVICES SHALL BE STUBBED UP TO CABLE TRAY ABOVE ACCESSIBLE CEILING.

(E) ALL PENETRATIONS THROUGH FIRE RATED WALLS SHALL HAVE SOUND RETARDING/ABSORBING FIRE STOP MATERIAL.

(F) FURNISH AND INSTALL TV OUTLET AND TV RECEPTACLE IN SEPARATE BACKBOX AND WALL PLATE.

(G) PROVIDE CABLE TRAY AS SPECIFIED IN PROJECT SPECIFICATIONS.

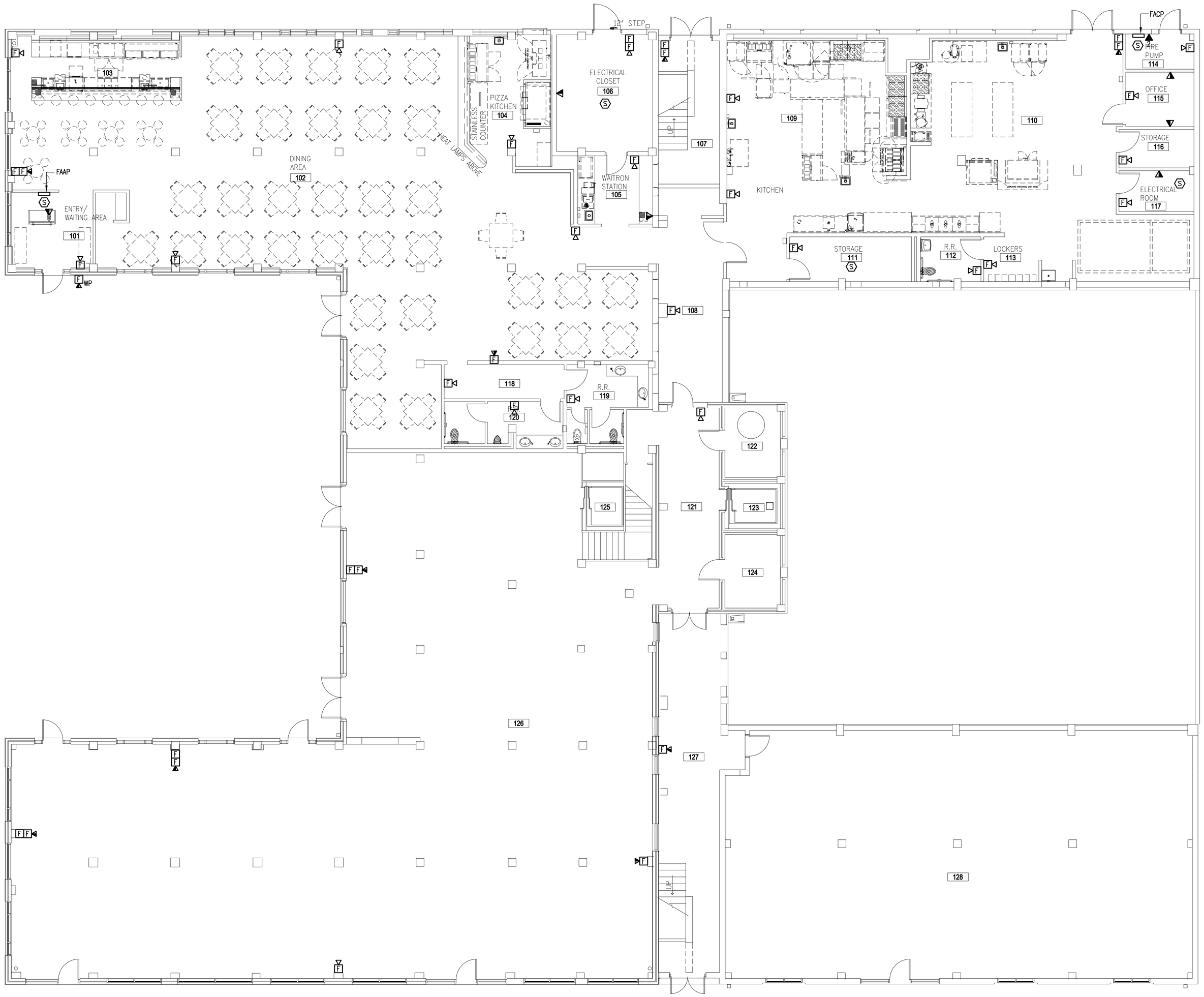

01 FIRST FLOOR – ELECTRICAL SPECIAL SYSTEMS PLAN

SCALE: 1/8" = 1'-0"

N

HALFF
5000 WEST MILITARY, SUITE 100
McALLEN, TEXAS 78503
TEL (956) 664-0286
FAX (956) 664-0282
Halff Associates firm registration number is 312

100% PRICING SET

REVISIONS

The Reese
Phase I
202 S. 1st. Street
Harlingen, TX

FIRST FLOOR
ELECTRICAL SPECIAL
SYSTEMS PLAN

MEGAMORPHOSIS
· ARCHITECTURE & INTERIOR DESIGN
1409 N. STUART PLACE RD., SUITE D
PHONE #(956) 428-1779 FAX # (956) 425-5886

PROJECT #
27074

MAR. 26, 2010

E-3.1

GENERAL NOTES:

(A) REFER TO ELECTRICAL LEGEND, SHEET E-0.1, FOR MOUNTING HEIGHT OF FIRE ALARM/SECURITY DEVICES.

(B) COORDINATE ROUGH-IN LOCATION OF ALL DEVICES WITH ARCHITECTURAL ELEVATIONS DETAILS, AND PLANS.

(C) REFER TO ARCHITECTURAL MILLWORK AND ELEVATION PLANS FOR EXACT LOCATION AND MOUNTING HEIGHT OF ALL WIRING DEVICES.

(D) ALL FIRE ALARM, INTERCOM, DATA, AND TV DEVICES SHALL BE STUBBED UP TO CABLE TRAY ABOVE ACCESSIBLE CEILING.

(E) ALL PENETRATIONS THROUGH FIRE RATED WALLS SHALL HAVE SOUND RETARDING/ABSORBING FIRE STOP MATERIAL.

(F) FURNISH AND INSTALL TV OUTLET AND TV RECEPTACLE IN SEPARATE BACKBOX AND WALL PLATE.

(G) PROVIDE CABLE TRAY AS SPECIFIED IN PROJECT SPECIFICATIONS.

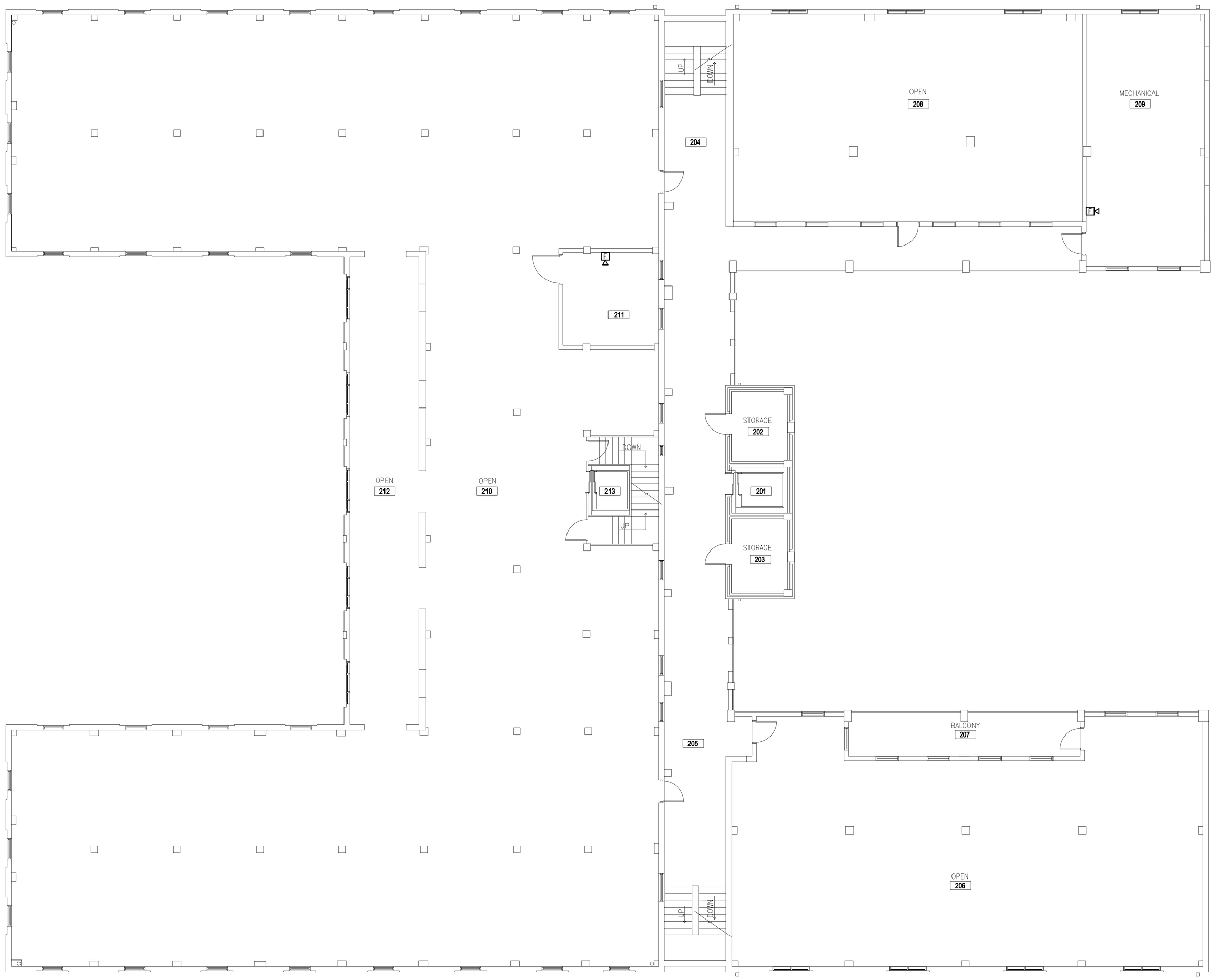

01 SECOND FLOOR – ELECTRICAL SPECIAL SYSTEMS PLAN

SCALE: 1/8" = 1'-0"

N

HALFF
5000 WEST MILITARY, SUITE 100
McALLEN, TEXAS 78503
TEL (956) 664-0286
FAX (956) 664-0282
Halff Associates firm registration number is 312

100% PRICING SET

REVISIONS

The Reese
Phase I
202 S. 1st. Street
Harlingen, TX

SECOND FLOOR
ELECTRICAL SPECIAL
SYSTEMS PLAN

MEGAMORPHOSIS
- ARCHITECTURE & INTERIOR DESIGN
1409 N. STUART PLACE RD., SUITE D
PHONE #(956) 428-1779 FAX # (956) 425-5886

PROJECT #
27074

MAR. 26, 2010

E-3.2

GENERAL NOTES:

(A) REFER TO EQUIPMENT CONNECTION SCHEDULE ON SHEET E-6.5 FOR WIRING TO MECHANICAL EQUIPMENT SHOWN ON THIS SHEET.

(B) FOR MECHANICAL EQUIPMENT, FURNISH AND INSTALL BRANCH CIRCUIT AND DISCONNECTING MEANS PER MECHANICAL EQUIPMENT CONNECTION SCHEDULE, SHEET E-6.5.

(C) COORDINATE ROUGH-IN LOCATION OF ALL DEVICES WITH ARCHITECTURAL ELEVATIONS DETAILS, AND PLANS.

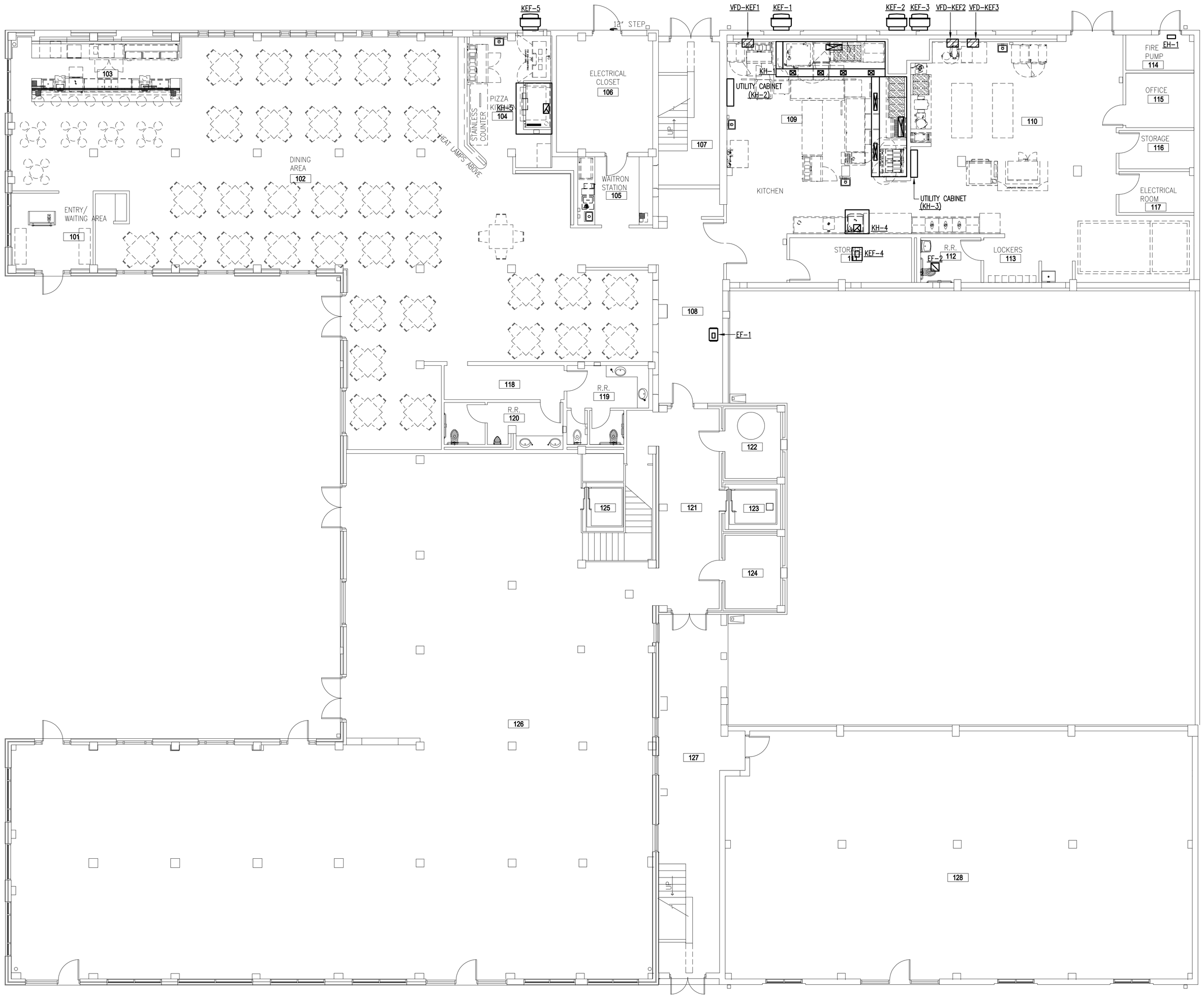

01 FIRST FLOOR – MECHANICAL EQUIPMENT PLAN

SCALE: 1/8" = 1'-0"

HALFF

5000 WEST MILITARY, SUITE 100
McALLEN, TEXAS 78503
TEL (956) 664-0286
FAX (956) 664-0282

Halff Associates firm registration number is 312

100% PRICING SET

REVISIONS

The Reese
Phase I
202 S. 1st. Street
Harlingen, TX

FIRST FLOOR
MECHANICAL
EQUIPMENT PLAN

MEGAMORPHOSIS
· ARCHITECTURE & INTERIOR DESIGN
1409 N. STUART PLACE RD., SUITE D
PHONE #(956) 428-1779 FAX # (956) 425-5886

PROJECT #
27074

MAR. 26, 2010

E-4.1

GENERAL NOTES:

(A) REFER TO EQUIPMENT CONNECTION SCHEDULE ON SHEET E-6.5 FOR WIRING TO MECHANICAL EQUIPMENT SHOWN ON THIS SHEET.

(B) FOR MECHANICAL EQUIPMENT, FURNISH AND INSTALL BRANCH CIRCUIT AND DISCONNECTING MEANS PER MECHANICAL EQUIPMENT CONNECTION SCHEDULE, SHEET E-6.5.

(C) COORDINATE ROUGH-IN LOCATION OF ALL DEVICES WITH ARCHITECTURAL ELEVATIONS DETAILS, AND PLANS.

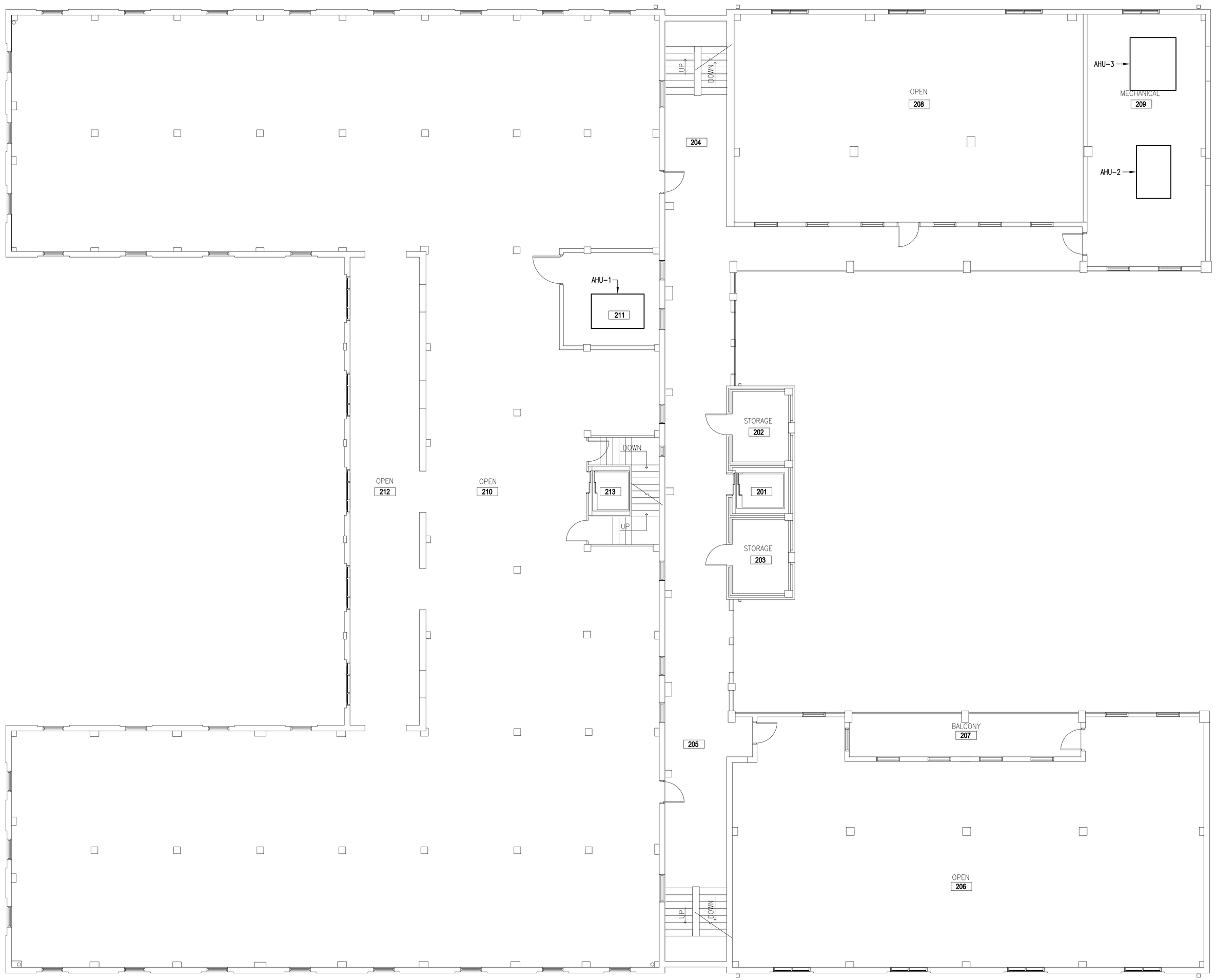

01 SECOND FLOOR – MECHANICAL EQUIPMENT PLAN

SCALE: 1/8" = 1'-0"

N

HALFF
5000 WEST MILITARY, SUITE 100
McALLEN, TEXAS 78503
TEL (956) 664-0286
FAX (956) 664-0282
Halff Associates firm registration number is 312

100% PRICING SET

REVISIONS

The Reese
Phase I
202 S. 1st. Street
Harlingen, TX

SECOND FLOOR
MECHANICAL EQUIPMENT PLAN

MEGAMORPHOSIS
- ARCHITECTURE & INTERIOR DESIGN
1409 N. STUART PLACE RD., SUITE D
PHONE # (956) 428-1779 FAX # (956) 425-5886

PROJECT # 27074

MAR. 26, 2010

E-4.2

GENERAL NOTES:

(A) REFER TO EQUIPMENT CONNECTION SCHEDULE ON 02/E-6.5 FOR WIRING TO MECHANICAL EQUIPMENT SHOWN ON THIS SHEET.

(B) FOR MECHANICAL EQUIPMENT, FURNISH AND INSTALL BRANCH CIRCUIT AND DISCONNECTING MEANS PER MECHANICAL EQUIPMENT CONNECTION SCHEDULE, 02/E-6.5.

(C) COORDINATE ROUGH-IN LOCATION OF ALL DEVICES WITH ARCHITECTURAL ELEVATIONS DETAILS, AND PLANS.

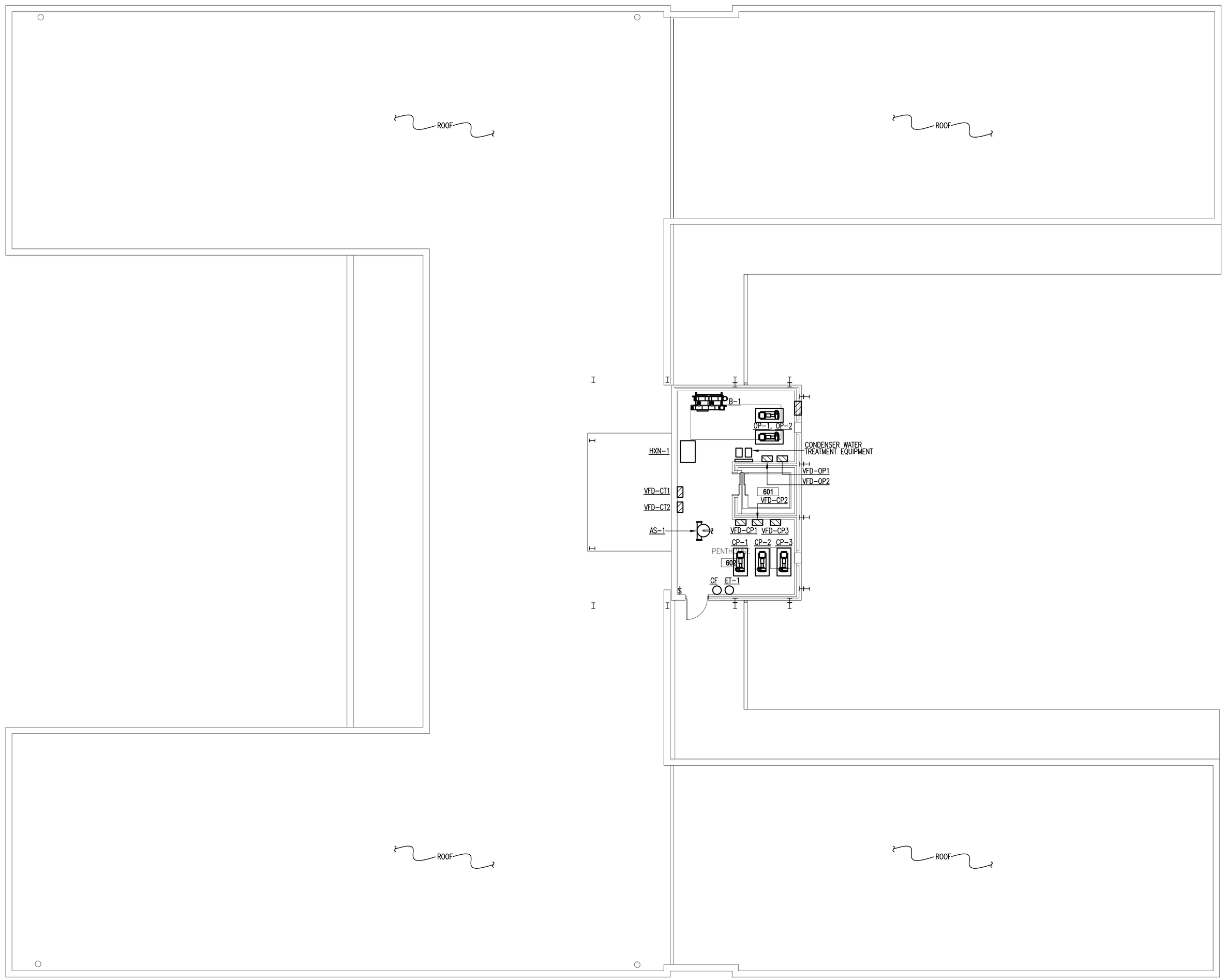

01 PENTHOUSE – ELECTRICAL MECHANICAL EQUIPMENT PLAN

SCALE: 1/8" = 1'-0"

HALFF
5000 WEST MILITARY, SUITE 100
McALLEN, TEXAS 78503
TEL (956) 664-0286
FAX (956) 664-0282
Halff Associates firm registration number is 312

100% PRICING SET

REVISIONS

The Reese
Phase I
202 S. 1st. Street
Harlingen, TX

PENTHOUSE
MECHANICAL EQUIPMENT PLAN

MEGAMORPHOSIS
ARCHITECTURE & INTERIOR DESIGN
1409 N. STUART PLACE RD., SUITE D
PHONE #(956) 428-1779 FAX # (956) 425-5886

PROJECT # 27074

MAR. 26, 2010

E-4.6

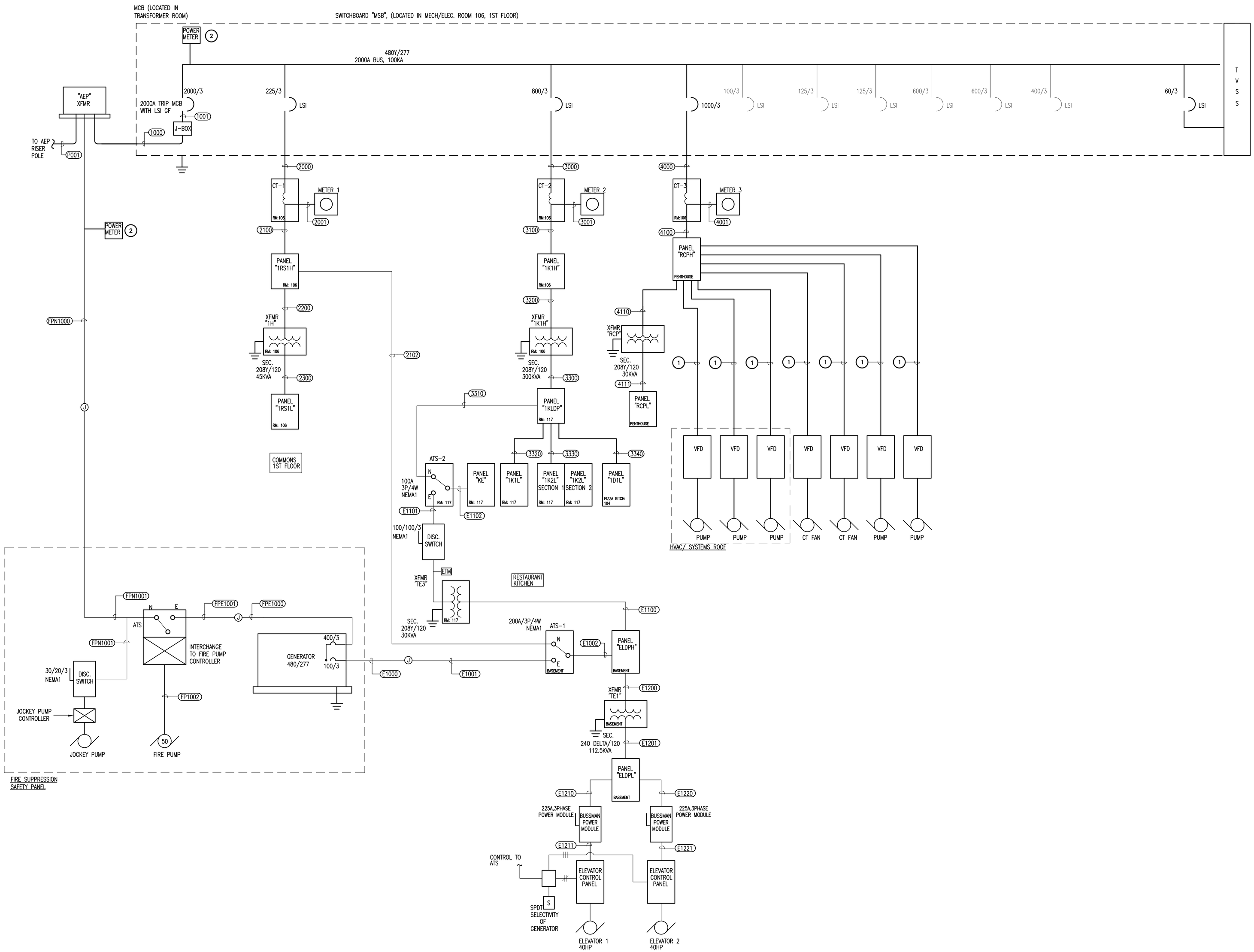

01 ELECTRICAL ONE LINE DIAGRAM
SCALE:N.T.S.

KEY NOTES:

1. REFET TO MECHANICAL EQUIPMENT CONNECTION SCHEDULE 02/E6.5.
2. FURNISH AND INSTALL KILOWATT HOUR METER.

REVISIONS

The Reese
Phase I
202 S. 1st. Street
Harlingen, TX

ELECTRICAL
ONE LINE DIAGRAM

100% PRICING SET

MEGAMORPHOSIS
- ARCHITECTURE & INTERIOR DESIGN
1409 N. STUART PLACE RD., SUITE D
PHONE #(956) 428-1779 FAX # (956) 425-5886

HALFF
5000 WEST MILITARY, SUITE 100
McALLEN, TEXAS 78503
TEL (956) 664-0286
FAX (956) 664-0282
Halff Associates firm registration number is 312

PROJECT # 27074
MAR. 26, 2010
E-5.1

PANELBOARD MSB

VOLTAGE: 480 VOLT 3 PHASE 3 WIRE — LOCATION: ELEC. RM. 106 (1ST FLOOR)
2000A MAIN CIRCUIT BREAKER — MOUNTING: SURFACE
BUSES: MAIN – 2000 A; NEUTRAL – 100%; EQUIPMENT GROUND — Isc =65,000 A RMS SYM AVAILABLE

VA:L	VA:R	VA:O	LOAD	BKR	CKT	PH	CKT	BKR	LOAD	VA:L	VA:R	VA:O
5890	1080	36552	PNL 1RS1H	225/3	1	A	2	600/3	SPARE (FUTURE)			
3234		37737	*	–	3	B	4	–	*			
3240	720	37652	*	–	5	C	6	–	*			
5963	2700	75051	PNL 1K1H	800/3	7	A	8	400/3	SPARE (FUTURE)			
6526	1980	76252	*	–	9	B	10	–	*			
9057	1980	73947	*	–	11	C	12	–	*			
497	540	36024	PNL RCPH	1000/3	13	A	14	20/3	SPACE			
330		36024	*	–	15	B	16	–	*			
		36024	*	–	17	C	18	–	*			
			SPARE (FUTURE)	100/3	19	A	20	20/3	SPACE			
			*	–	21	B	22	–	*			
			*	–	23	C	24	–	*			
			SPARE (FUTURE)	125/3	25	A	26	20/3	SPACE			
			*	–	27	B	28	–	*			
			*	–	29	C	30	–	*			
			SPARE (FUTURE)	125/3	31	A	32	20/3	SPACE			
			*	–	33	B	34	–	*			
			*	–	35	C	36	–	*			
			SPARE (FUTURE)	600/3	37	A	38	60/3	SPD (TYPE A)			
			*	–	39	B	40	–	*			
			*	–	41	C	42	–	*			

VA:L (LIGHTING)	34737	CONNECTED	43421 DEMAND
VA:R (RECEPTACLES)	9000	CONNECTED	9000 DEMAND
VA:O (OTHER)	445263	CONNECTED	445263 DEMAND
VA: TOTAL	489000	CONNECTED	497684 DEMAND
AMPS: TOTAL	588	CONNECTED	599 DEMAND

L	R	O		TOTAL		
12350	4320	147627	VA CONNECTED TO A PHASE	164297	VA =	342 AMPS CONNECTED TO A PHASE @ 480 VOLTS
10090	1980	150013	VA CONNECTED TO B PHASE	162083	VA =	338 AMPS CONNECTED TO B PHASE @ 480 VOLTS
12297	2700	147623	VA CONNECTED TO C PHASE	162620	VA =	339 AMPS CONNECTED TO C PHASE @ 480 VOLTS
34737	9000	445263	TOTAL	489000	VA	

PANELBOARD 1RS1H

VOLTAGE: 480Y/277 VOLT 3 PHASE 4 WIRE — LOCATION: ELEC. RM. 106 (1ST FLOOR)
225A MAIN LUGS ONLY — MOUNTING: SURFACE
BUSES: MAIN – 225A; NEUTRAL – 100%; EQUIPMENT GROUND — Isc = 14,000 A RMS SYM AVAILABLE

VA:L	VA:R	VA:O	LOAD	BKR	CKT	PH	CKT	BKR	LOAD	VA:L	VA:R	VA:O
	720	1891	PNL 1RS1L VIA XFMR 1H	60/3	1	A	2	20/3	EH-1			1100
		2576	*	–	3	B	4	–	*			1100
		2491	*	–	5	C	6	–	*			1100
1853	360	28822	PNL ELDPH VIA ATS-1	200/3	7	A	8	20/3	LS-2			2106
852		29322	*	–	9	B	10	–	*			2106
710	720	28822	*	–	11	C	12	–	*			2106
1100			IN-GRADE UP LIGHTS	20/1	13	A	14	20/1	SPARE			
880			WALL PACKS	20/1	15	B	16	20/1	SPARE			
880			WALL PACKS	20/1	17	C	18	20/1	SPARE			
1349			BASEMENT LIGHTS	20/1	19	A	20	20/1	SPARE			
142			STRIP LIGHTS: RM 106, 116-117, 114	20/1	21	B	22	20/1	SPARE			
		500	LRP-B	20/1	23	C	24	20/1	SPARE			
710			STRIP LIGHTS: RM 209, 211	20/1	25	A	26	20/1	SPARE			
590			BUILDING SIGN LIGHTS	20/1	27	B	28	20/1	SPARE			
		2633	RP-1	20/3	29	C	30	20/1	SPARE			
		2633	*	–	31	A	32	20/1	SPARE			
		2633	*	–	33	B	34	20/1	SPARE			
770			WALL PACKS	20/1	35	C	36	20/1	SPARE			
880			WALL PACKS	20/1	37	A	38	20/1	SPARE			
770			WALL PACKS	20/1	39	B	40	20/1	SPARE			
880			WALL PACKS	20/1	41	C	42	20/1	SPARE			

VA:L (LIGHTING)	12364	CONNECTED	15455 DEMAND
VA:R (RECEPTACLES)	1800	CONNECTED	1800 DEMAND
VA:O (OTHER)	111941	CONNECTED	111941 DEMAND
VA: TOTAL	126105	CONNECTED	129196 DEMAND
AMPS: TOTAL	152	CONNECTED	155 DEMAND

L	R	O		TOTAL		
5890	1080	36552	VA CONNECTED TO A PHASE	43522	VA =	157 AMPS CONNECTED TO A PHASE @ 277 VOLTS
3234		37737	VA CONNECTED TO B PHASE	40971	VA =	148 AMPS CONNECTED TO B PHASE @ 277 VOLTS
3240	720	37652	VA CONNECTED TO C PHASE	41612	VA =	150 AMPS CONNECTED TO C PHASE @ 277 VOLTS
12364	1800	111941	TOTAL	126105	VA	

PANELBOARD 1RS1L

VOLTAGE: 208Y/120 VOLT 3 PHASE 4 WIRE — LOCATION: ELEC. RM. 106 (1ST FLOOR)
60A MAIN LUGS ONLY — MOUNTING: SURFACE
BUSES: MAIN – 60 A; NEUTRAL – 100%; EQUIPMENT GROUND; — Isc = 14,000 A RMS SYM AVAILABLE

VA:L	VA:R	VA:O	LOAD	BKR	CKT	PH	CKT	BKR	LOAD	VA:L	VA:R	VA:O
	720		RECEPTACLES: RM 209, 211	20/1	1	A	2	20/1	FIRE ALARM CONTROL PANEL			500
		500	EXTERIOR LANTERN SOLENOID VALVE	20/1	3	B	4	20/1	FIRE ALARM ANNUNCIATOR PANEL			500
		500	WATER SOFTNER	20/1	5	C	6	20/1	LS-1			1176
		500	REVERSE OSMOSIS SYSTEM	20/1	7	A	8	20/1	SPARE			
		500	WH-1	20/1	9	B	10	20/1	SPARE			
		315	RP-1	20/1	11	C	12	20/1	SPARE			
		315	RP-2	20/1	13	A	14	20/1	SPARE			
		500	GAS LANTERN SOLENOID VALVE	20/1	15	B	16	20/1	SPARE			
		500	DUPLEX POM	20/1	17	C	18	20/1	SPARE			
		576	RP-2	20/2	19	A	20	20/1	SPARE			
		576	*	–	21	B	22	20/1	SPARE			
			SPARE	20/1	23	C	24	20/1	SPARE			

VA:L (LIGHTING)		CONNECTED	DEMAND
VA:R (RECEPTACLES)	720	CONNECTED	720 DEMAND
VA:O (OTHER)	6958	CONNECTED	6958 DEMAND
VA: TOTAL	7678	CONNECTED	7678 DEMAND
AMPS: TOTAL	21	CONNECTED	21 DEMAND

L	R	O		TOTAL		
	720	1891	VA CONNECTED TO A PHASE	2611	VA =	22 AMPS CONNECTED TO A PHASE @ 120 VOLTS
		2576	VA CONNECTED TO B PHASE	2576	VA =	21 AMPS CONNECTED TO B PHASE @ 120 VOLTS
		2491	VA CONNECTED TO C PHASE	2491	VA =	21 AMPS CONNECTED TO C PHASE @ 120 VOLTS
	720	6958	TOTAL	7678	VA	

PANELBOARD 1K1H

VOLTAGE: 480Y/277 VOLT 3 PHASE 4 WIRE — LOCATION: ROOM 117
400A MAIN CIRCUIT BREAKER LUGS ONLY — MOUNTING: SURFACE
BUSES: MAIN – 400A; NEUTRAL – 100%; EQUIPMENT GROUND; — Isc = 22,000 A RMS SYM AVAILABLE

VA:L	VA:R	VA:O	LOAD	BKR	CKT	PH	CKT	BKR	LOAD	VA:L	VA:R	VA:O
5608	2700	44096	PNL 1KLDP VIA XFMR 1K	600/3	1	A	2	20/3	VFD-KEF3			942
6526	1980	45297	*	–	3	B	4	–	*			942
9057	1980	42992	*	–	5	C	6	–	*			942
355			STRIP LIGHTS: RM 116-117, 114	20/1	7	A	8	20/3	KEF-5			443
		942	VFD-KEF1	20/3	9	B	10	–	*			443
		942	*	–	11	C	12	–	*			443
		942	*	–	13	A	14	60/3	AHU-1			15298
		942	VFD-KEF2	20/3	15	B	16	–	*			15298
		942	*	–	17	C	18	–	*			15298
		942	*	–	19	A	20	50/3	AHU-2			12388
			SPARE	20/1	21	B	22	–	*			12388
			SPARE	20/1	23	C	24	–	*			12388
			SPARE	20/1	25	A	26	45/3	AHU-3			11085
			SPARE	20/1	27	B	28	–	*			11085
			SPARE	20/1	29	C	30	–	*			11085

VA:L (LIGHTING)	21546	CONNECTED	26933 DEMAND
VA:R (RECEPTACLES)	6660	CONNECTED	6660 DEMAND
VA:O (OTHER)	258505	CONNECTED	258505 DEMAND
VA: TOTAL	286711	CONNECTED	292098 DEMAND
AMPS: TOTAL	345	CONNECTED	351 DEMAND

L	R	O		TOTAL		
5963	2700	75051	VA CONNECTED TO A PHASE	83714	VA =	302 AMPS CONNECTED TO A PHASE @ 277 VOLTS
6526	1980	76252	VA CONNECTED TO B PHASE	84758	VA =	306 AMPS CONNECTED TO B PHASE @ 277 VOLTS
9057	1980	73947	VA CONNECTED TO C PHASE	84984	VA =	307 AMPS CONNECTED TO C PHASE @ 277 VOLTS
21546	6660	225250	TOTAL	253456	VA	

PANELBOARD 1K1L – Section 1

VOLTAGE: 208Y/120 VOLT 3 PHASE 4 WIRE — LOCATION: ROOM 117
400A MAIN CIRCUIT BREAKER LUGS ONLY — MOUNTING: SURFACE
BUSES: MAIN – 400A; NEUTRAL – 100%; EQUIPMENT GROUND; — Isc = 14,000 A RMS SYM AVAILABLE

VA:L	VA:R	VA:O	LOAD	BKR	CKT	PH	CKT	BKR	LOAD	VA:L	VA:R	VA:O
		600	DOUBLE FRYER [E1]	20/1*	1	A	2	20/2	QUICKCHILLER [E20]			1560
			SHUNT TRIP	–	3	B	4	–	*			1560
		300	6 BURNER HOT PLATE [E2]	20/1*	5	C	6	20/1	COMMERCIAL MICROWAVE [E21]			1584
			SHUNT TRIP		7	A	8	20/2	COUNTER TOP BATCH FREEZER[E35]			705
		100	CHARBROILER [E3]	20/1*	9	B	10	–	*			705
			SHUNT TRIP		11	C	12	20/2	ICE CUBER [E24]			1664
		1024	SINGLE GLASS DOOR. REF. [E6]	20/1	13	A	14	–	*			1664
		989	PIZZA PREP. TABLE [E9]	20/1	15	B	16	20/1	PIZZA PREP TABLE [E61]			1032
		840	PASS THRU GLASS DR. REF.[E10]	20/1	17	C	18	20/1*	8 BURNER HOT PLATE [E30]			100
		540	REACH IN-REF. [E11]	20/1	19	A	20		SHUNT TRIP			
		1300	REACH IN-FREEZER [E12]	20/1	21	B	22	20/1	HEATING/PROOFINGCABS [E31]			1920
		656	UNDER COUNTER REF. [E13]	20/1	23	C	24	20/1	SHUNT TRIP			
		960	20 QT. MIXER [E14]	20/1	25	A	26	20/1	UNDER COUNTER REF. [E13]			656
			SHRIMP PEELER [E38]	20/1	27	B	28	20/1	REACH IN-REF. [E11]			540
		996	UND. SOLID DR. FREEZER [E39]	20/1	29	C	30	20/1	SPARE			
		180	CHEESEMELTER [E48]	20/1	31	A	32	20/1	GENERAL PURPOSE GFI. RECPT.		180	
		375	CARBONATOR [E53]	20/1	33	B	34	20/1	GENERAL PURPOSE GFI. RECPT.		180	
	180		ICE CRUSHER [E58]	20/1	35	C	36	20/1	GENERAL PURPOSE GFI. RECPT.		180	
	360		GENERAL PURPOSE GFI. RECPT.	20/1	37	A	38	20/1	GENERAL PURPOSE RECPT.		720	
	720		GENERAL PURPOSE GFI. RECPT.	20/1	39	B	40	20/1	SPARE			
	180		GENERAL PURPOSE GFI. RECPT.	20/1	41	C	42	20/1	SPARE			

* BREAKER TO BE PROVIDED WITH 120VOLT SHUNT TRIP DEVICE .**BREAKER TO HAVE LOCK ON DEVICE MARK FOR FIRE ALARM

VA:L (LIGHTING)		CONNECTED	DEMAND
VA:R (RECEPTACLES)	2700	CONNECTED	2700 DEMAND
VA:O (OTHER)	22550	CONNECTED	22550 DEMAND
VA: TOTAL	25250	CONNECTED	25250 DEMAND
AMPS: TOTAL	70	CONNECTED	70 DEMAND

L	R	O		TOTAL		
	1260	7889	VA CONNECTED TO A PHASE	9149	VA =	76 AMPS CONNECTED TO A PHASE @ 120 VOLTS
	900	8521	VA CONNECTED TO B PHASE	9421	VA =	79 AMPS CONNECTED TO B PHASE @ 120 VOLTS
	540	6140	VA CONNECTED TO C PHASE	6680	VA =	56 AMPS CONNECTED TO C PHASE @ 120 VOLTS
	2700	22550	TOTAL	25250	VA	

PANELBOARD 1D1L

VOLTAGE: 208Y/120 VOLT 3 PHASE 4 WIRE — LOCATION: PIZZA KITCHEN RM 104
100A MAIN LUGS ONLY — MOUNTING: RECESSED
BUSES: MAIN – 100 A; NEUTRAL – 100%; EQUIPMENT GROUND; — Isc = 14,000 A RMS SYM AVAILABLE

VA:L	VA:R	VA:O	LOAD	BKR	CKT	PH	CKT	BKR	LOAD	VA:L	VA:R	VA:O
		976	BACK BAR COOLER [E4]	20/1	1	A	2	20/1	BEEHIVE BLENDER [E52]		360	
		472	GLASS DOOR MERCHANDISER [E5]	20/1	3	B	4	20/1	CARBONATOR [E56]			375
		1058	HORIZ. BTL. COOLER [E7]	20/1	5	C	6	20/1	WINE COOLER [E59]		180	
		1848	GLASSWASHER [E16]	20/1	7	A	8	20/1	POS SYSTEM [E62]		360	
		1800	GAS ROTISSERIE [E19]	20/1	9	B	10	20/1	POS SYSTEM [E62]		360	
		1800	FORNO OVEN [E25]	20/1*	11	C	12	20/1	POS SYSTEM [E62]		180	
			SHUNT TRIP		13	A	14	20/1	BUMP SCREEN [E63]		360	
		1728	TEA BREWER [E32]	20/1	15	B	16	20/1	BUMP SCREEN [E63]		180	
		1368	AIRPOT BREWER [E33]	20/1	17	C	18	20/1	GFI RECEPT.		180	
		1896	FROZEN DRINK MACHINE [E36]	20/1	19	A	20	20/1	PIZZA PREP TABLE [E60]			1032
	180		ESPRESSO MACHINE LINEA [E49]	20/1	21	B	22	20/1	SPARE			
	180		MINI COFFEE BEAN GRINDER [E50]	20/1	23	C	24	20/1	SPARE			
		500	KITCHEN HOOD SOLENOID VALVE	20/1	25	A	26	20/1	SPARE			
			SPARE	20/1	27	B	28	20/1	SPARE			
			SPARE	20/1	29	C	30	20/1	SPARE			

* BREAKER TO BE PROVIDED WITH 120VOLT SHUNT TRIP DEVICE .**BREAKER TO HAVE LOCK ON DEVICE MARK FOR FIRE ALARM

VA:L (LIGHTING)		CONNECTED	DEMAND
VA:R (RECEPTACLES)	2520	CONNECTED	2520 DEMAND
VA:O (OTHER)	13377	CONNECTED	13377 DEMAND
VA: TOTAL	15897	CONNECTED	15897 DEMAND
AMPS: TOTAL	44	CONNECTED	44 DEMAND

L	R	O		TOTAL		
	1080	5032	VA CONNECTED TO A PHASE	6112	VA =	51 AMPS CONNECTED TO A PHASE @ 120 VOLTS
	720	4601	VA CONNECTED TO B PHASE	5321	VA =	44 AMPS CONNECTED TO B PHASE @ 120 VOLTS
	720	4244	VA CONNECTED TO C PHASE	4964	VA =	41 AMPS CONNECTED TO C PHASE @ 120 VOLTS
	2520	13877	TOTAL	16397	VA	

PANELBOARD 1KLDP

VOLTAGE: 208Y/120 VOLT 3 PHASE 4 WIRE — LOCATION: ROOM 117
600A MAIN CIRCUIT BREAKER LUGS ONLY — MOUNTING: SURFACE
BUSES: MAIN – 600A; NEUTRAL – 100%; EQUIPMENT GROUND; — Isc = 35,000 A RMS SYM AVAILABLE

VA:L	VA:R	VA:O	LOAD	BKR	CKT	PH	CKT	BKR	LOAD	VA:L	VA:R	VA:O
	1260	7889	PANEL IK1L	400/3	1	A	2	100/3	PANEL KE VIA ATS-2			4600
	900	8521	*	–	3	B	4	–	*			4600
	540	6140	*	–	5	C	6	–	*		800	6100
5608	360	26575	PANEL 1K2L	400/3	7	A	8	100/3	SPARE			
6526	360	27575	*	–	9	B	10	–	*			
8257	720	26508	*	–	11	C	12	–	*			
	1080	5032	PANEL 1D1L	100/3	13	A	14	20/1	SPACE			
	720	4601	*	–	15	B	16	20/1	SPACE			
	720	4244	*	–	17	C	18	20/1	SPACE			

VA:L (LIGHTING)	21191	CONNECTED	26489 DEMAND
VA:R (RECEPTACLES)	6660	CONNECTED	6660 DEMAND
VA:O (OTHER)	132385	CONNECTED	132385 DEMAND
VA: TOTAL	160236	CONNECTED	165534 DEMAND
AMPS: TOTAL	445	CONNECTED	459 DEMAND

L	R	O		TOTAL		
5608	2700	44096	VA CONNECTED TO A PHASE	52404	VA =	437 AMPS CONNECTED TO A PHASE @ 120 VOLTS
6526	1980	45297	VA CONNECTED TO B PHASE	53803	VA =	448 AMPS CONNECTED TO B PHASE @ 120 VOLTS
9057	1980	42992	VA CONNECTED TO C PHASE	54029	VA =	450 AMPS CONNECTED TO C PHASE @ 120 VOLTS
21191	6660	132385	TOTAL	160236	VA	

PANELBOARD 1K2L – Section 1

VOLTAGE: 208Y/120 VOLT 3 PHASE 4 WIRE — LOCATION: ROOM 117
400A MAIN LUGS ONLY — MOUNTING: SURFACE
BUSES: MAIN – 400 A; NEUTRAL – 100%; EQUIPMENT GROUND; — Isc = 22,000 A RMS SYM AVAILABLE

VA:L	VA:R	VA:O	LOAD	BKR	CKT	PH	CKT	BKR	LOAD	VA:L	VA:R	VA:O
		3238	PASTA COOKER CPE-1 [E23]	35/3*	1	A	2	30/3*	TILTING SKILLET [E27]			2500
		3238	*	–	3	B	4	–	*			2500
		3238	*	–	5	C	6	–	*			2500
			SHUNT TRIP		7	A	8		SHUNT TRIP			
		2666	DECK OVEN [E26]	35/3	9	B	10	25/3*	JACKETED KETTLE [E28]			2100
		2666	*	–	11	C	12	–	*			2100
		2666	*	–	13	A	14	–	*			2100
		1080	WASTE DISPOSAL	20/3	15	B	16		SHUNT TRIP			
		1080	*	–	17	C	18	50/3*	OVEN/STEAMER [E18]			4633
		1080	*	–	19	A	20	–	*			4633
			SPARE	20/1	21	B	22	–	*			4633
			SPARE	20/1	23	C	24		SHUNT TRIP			
		2954	DISHWASHER [E15]	35/3	25	A	26	20/1	HOSTESS COUNTER		360	
		2954	*	–	27	B	28	20/1	WAITRON COUNTER		360	
		2954	*	–	29	C	30	20/1	RECEPTACLES: RM 121, 108, 102		720	
		3758	DISHWASHER ELECT.BOOSTER [E15]	50/3	31	A	32	20/1	RECEPTACLES: RM 101, 102			
		3758	*	–	33	B	34	20/1	RR 120: AUTOMATIC PLUMB. FIXTURE			500
		3758	*	–	35	C	36	20/1	RR 119: AUTOMATIC PLUMB. FIXTURE			500
			GENERAL PURPOSE GFI. RECPT.	20/1	37	A	38	25/1	RR 120: HAND DRYER			1950
		696	EF-1	20/1	39	B	40	25/1	RR 119: HAND DRYER			1950
		129	EF-2	20/1	41	C	42	25/1	RR 112: HAND DRYER			1950

PANELBOARD 1K2L – Section 2

VA:L	VA:R	VA:O	LOAD	BKR	CKT	PH	CKT	BKR	LOAD	VA:L	VA:R	VA:O
		500	GAS LANTERN ELECTRIC STRIKE	20/1	43	A	44	20/1	KEF-4			696
		500	HOOD CONTROL PNL. KH-1	20/1	45	B	46	20/1	SPARE			
		500	HOOD CONTROL PNL. KH-2	20/1	47	C	48	20/1	SPARE			
		500	HOOD CONTROL PNL. KH-3	20/1	49	A	50	20/1	SPARE			
		500	LAVARATORY SENSOR	20/1	51	B	52	20/1	SPARE			
		500	KITCHEN HOOD SOLENOID VALVE	20/1	53	C	54	20/1	SPARE			
			SPARE	20/1	55	A	56	20/1	SPARE			
140			BAR DOWNLIGHTS	20/1	57	B	58	20/1	SPARE			
840			BAR LIGHTING	20/1	59	C	60	20/1	SPARE			
140			PIZZA KITCHEN DOWNLIGHTS	20/1	61	A	62	20/1	SPARE			
750			HEAT LAMPS & PIZZA BAR ROPE LTS	20/1	63	B	64	20/1	SPARE			
144			BACK-LIT CUTWOOD SCREEN	20/1	65	C	66	20/1	SPARE			
1117			RR 118-120, CORR 121	20/1	67	A	68	20/1	SPARE			
1631			KITCHEN 109, RM 111	20/1	69	B	70	20/1	SPARE			
1703			KITCHEN 110, RR 112, RM 113-117	20/1	71	C	72	20/1	SPARE			
70			RM 106, WAITING STATION 105	20/1	73	A	74	20/1	SPARE			
4005			DIMMING PANEL LCP	150/3	75	B	76	20/1	SPARE			
5570			*	–	77	C	78	20/1	SPARE			
4281			*	–	79	A	80	20/1	SPARE			
		500	LRP-A	20/1	81	B	82	20/1	SPARE			
			SPARE	20/1	83	C	84	20/1	SPARE			

* BREAKER TO BE PROVIDED WITH 120VOLT SHUNT TRIP DEVICE .**BREAKER TO HAVE LOCK ON DEVICE MARK FOR FIRE ALARM

VA:L (LIGHTING)	20391	CONNECTED	25489 DEMAND
VA:R (RECEPTACLES)	1440	CONNECTED	1440 DEMAND
VA:O (OTHER)	80658	CONNECTED	80658 DEMAND
VA: TOTAL	102489	CONNECTED	107587 DEMAND
AMPS: TOTAL	284	CONNECTED	299 DEMAND

L	R	O		TOTAL		
5608	360	26575	VA CONNECTED TO A PHASE	32543	VA =	271 AMPS CONNECTED TO A PHASE @ 120 VOLTS
6526	360	27575	VA CONNECTED TO B PHASE	34461	VA =	287 AMPS CONNECTED TO B PHASE @ 120 VOLTS
8257	720	26508	VA CONNECTED TO C PHASE	35485	VA =	296 AMPS CONNECTED TO C PHASE @ 120 VOLTS
20391	1440	80658	TOTAL	102489	VA	

01 ELECTRICAL PANEL SCHEDULES
SCALE:N.T.S.

PANEL SCHEDULES

PANEL NAME	NUMBER OF SECTIONS	SHEET LOCATION
"MSB"	1	E2.1
"1RS1H"	1	E2.1
"1RS1L"	1	E2.1
"1K1H"	1	E2.1
"1KLDP"	1	E2.1
"1K1L"	1	E2.1
"1K2L"	2	E2.1
"1D1L"	1	E2.1

HALFF
5000 WEST MILITARY, SUITE 100
McALLEN, TEXAS 78503
TEL (956) 664-0286
FAX (956) 664-0282
Halff Associates firm registration number is 312

100% PRICING SET

REVISIONS

The Reese
Phase I
202 S. 1st. Street
Harlingen, TX

ELECTRICAL
PANEL SCHEDULES

MEGAMORPHOSIS
- ARCHITECTURE & INTERIOR DESIGN
1409 N. STUART PLACE RD., SUITE D
PHONE #(956) 428-1779 FAX # (956) 425-5886

PROJECT # 27074
MAR. 26, 2010
E-6.1

PANELBOARD KE

VOLTAGE: 208Y/120 VOLT 3 PHASE 4 WIRE — LOCATION: ROOM 117
100A MAIN LUGS ONLY — MOUNTING: SURFACE
BUSES: MAIN – 100A; NEUTRAL – 100% EQUIPMENT GROUND — Isc = 14,000 A RMS SYM AVAILABLE

VA:L	VA:R	VA:O	LOAD	BKR	CKT	PH	CKT	BKR	LOAD	VA:L	VA:R	VA:O
		1000	COOLER – COMPRESSOR	30/3	1	A	2	40/3	FREEZER – COMPRESSOR			3600
		1000*		–	3	B	4	–	*			3600
		1000*		–	5	C	6	–	*			3600
			COOLER – DRAIN DEFROST	20/1	7	A	8	20/1	FREEZER – DRAIN DEFROST			
			COOLER– DOOR DEFROST	20/1	9	B	10	20/1	FREEZER– DOOR DEFROST			
800			FREEZER/COOLER – LIGHTS	20/1	11	C	12	20/1	FREEZER–HEAT TRACE			1500
			SPARE	20/1	13	A	14	20/1	SPARE			
			SPARE	20/1	15	B	16	20/1	SPARE			
			SPARE	20/1	17	C	18	20/1	SPARE			
			SPARE	20/1	19	A	20	20/1	SPARE			
			SPARE	20/1	21	B	22	20/1	SPARE			
			SPARE	20/1	23	C	24	20/1	SPARE			

VA:L (LIGHTING)	800	CONNECTED	1000	DEMAND
VA:R (RECEPTACLES)		CONNECTED		DEMAND
VA:O (OTHER)	15300	CONNECTED	15300	DEMAND
VA: TOTAL	16100	CONNECTED	16300	DEMAND
AMPS: TOTAL	45	CONNECTED	45	DEMAND

L	R	O		TOTAL		
		4600	VA CONNECTED TO A PHASE	4600	VA =	38 AMPS CONNECTED TO A PHASE @ 120 VOLTS
		4600	VA CONNECTED TO B PHASE	4600	VA =	38 AMPS CONNECTED TO B PHASE @ 120 VOLTS
800		6100	VA CONNECTED TO C PHASE	6900	VA =	58 AMPS CONNECTED TO C PHASE @ 120 VOLTS
800		15300	TOTAL	16100	VA	

PANELBOARD ELDPH

VOLTAGE: 480Y/277 VOLT 3 PHASE 4 WIRE — LOCATION: BASEMENT
150A MAIN CIRCUIT BREAKER — MOUNTING: SURFACE
BUSES: MAIN – 150 A; NEUTRAL – 100%; EQUIPMENT GROUND; — Isc = 14,000 A RMS SYM AVAILABLE

VA:L	VA:R	VA:O	LOAD	BKR	CKT	PH	CKT	BKR	LOAD	VA:L	VA:R	VA:O
360	360	28822	PNL ELDPL VIA XFMR TE3	600/3	1	A	2	20/1	SPARE			
		29322*		–	3	B	4	20/1	SPARE			
	720	28822*		–	5	C	6	20/1	SPARE			
1491			STAIRCASE LIGHTS	20/1	7	A	8	20/1	SPARE			
852			STAIRCASE LIGHTS	20/1	9	B	10	20/1	SPARE			
710			STAIRCASE LIGHTS	20/1	11	C	12	20/1	SPARE			
			SPARE	20/1	13	A	14	20/1	SPARE			
			SPARE	20/1	15	B	16	20/1	SPARE			
			SPARE	20/1	17	C	18	20/1	SPARE			
			SPARE	20/1	19	A	20	20/1	SPARE			
			SPARE	20/1	21	B	22	20/1	SPARE			
			SPARE	20/1	23	C	24	20/1	SPARE			

VA:L (LIGHTING)	3413	CONNECTED	4266	DEMAND
VA:R (RECEPTACLES)	1080	CONNECTED	1080	DEMAND
VA:O (OTHER)	86966	CONNECTED	86966	DEMAND
VA: TOTAL	91459	CONNECTED	92312	DEMAND
AMPS: TOTAL	110	CONNECTED	111	DEMAND

L	R	O		TOTAL		
1851	360	28822	VA CONNECTED TO A PHASE	31033	VA =	112 AMPS CONNECTED TO A PHASE @ 277 VOLTS
852		29322	VA CONNECTED TO B PHASE	30174	VA =	109 AMPS CONNECTED TO B PHASE @ 277 VOLTS
710	720	28822	VA CONNECTED TO C PHASE	30252	VA =	109 AMPS CONNECTED TO C PHASE @ 277 VOLTS
3413	1080	86966	TOTAL	91459	VA	

PANELBOARD ELDPL

VOLTAGE: 240 VOLT 3 PHASE 4 WIRE HIGH LEG — LOCATION: BASEMENT
600A MAIN LUGS ONLY — MOUNTING: SURFACE
BUSES: MAIN – 600A; NEUTRAL – 100% EQUIPMENT GROUND — Isc = 10,000 A RMS SYM AVAILABLE

VA:L	VA:R	VA:O	LOAD	BKR	CKT	PH	CKT	BKR	LOAD	VA:L	VA:R	VA:O
		1441	ELEVATOR MOTOR 1 (40HP)	300/3	1	A	2	300/3	ELEVATOR MOTOR 2 (40HP)			1441
		1441	"	–	3	B	4	–	"			1441
		1441	"	–	5	C	6	–	"			1441
180	180		ELEVATOR RECEPT. PIT	20/1	7	A	8	20/1	ELEVATOR RECEPT. PIT	180	180	
		500	ESP–1	20/1	9	B	10	20/1	SPARE			
	360		RECEPTACLES	20/1	11	C	12	20/1	RECEPTACLES: BASEMENT		360	
			SPACE	20/1	13	A	14	20/1	SPACE			
			SPACE	20/1	15	B	16	20/1	SPACE			
			SPACE	20/1	17	C	18	20/1	SPACE			
			SPACE	20/1	19	A	20	20/1	SPACE			
			SPACE	20/1	21	B	22	20/1	SPACE			
			SPACE	20/1	23	C	24	20/1	SPACE			

VA:L (LIGHTING)	360	CONNECTED	450	DEMAND
VA:R (RECEPTACLES)	1080	CONNECTED	1080	DEMAND
VA:O (OTHER)	86966	CONNECTED	86966	DEMAND
VA: TOTAL	88406	CONNECTED	88496	DEMAND
AMPS: TOTAL	213	CONNECTED	213	DEMAND

L	R	O		TOTAL		
360	360	28822	VA CONNECTED TO A PHASE	29542	VA =	123 AMPS CONNECTED TO A PHASE @ 240 VOLTS
		29322	VA CONNECTED TO B PHASE	29322	VA =	122 AMPS CONNECTED TO B PHASE @ 240 VOLTS
	720	28822	VA CONNECTED TO C PHASE	29542	VA =	123 AMPS CONNECTED TO C PHASE @ 240 VOLTS
360	1080	86966	TOTAL	88406	VA	

PANELBOARD RCPH

VOLTAGE: 480Y/277 VOLT 3 PHASE 4 WIRE — LOCATION: PENTHOUSE
200A MAIN CIRCUIT BREAKER — MOUNTING: SURFACE
BUSES: MAIN – 200 A; NEUTRAL – 100%; EQUIPMENT GROUND; — Isc = 14,000 A RMS SYM AVAILABLE

VA:L	VA:R	VA:O	LOAD	BKR	CKT	PH	CKT	BKR	LOAD	VA:L	VA:R	VA:O
	540		PNL RCPL VIA XFMR RCP	100/3	1	A	2	35/3	VFD–OP1			7482
			*	–	3	B	4	–	*			7482
			*	–	5	C	6	–	*			7482
497			PENTHOUSE LIGHTS	20/1	7	A	8	35/3	VFD–OP2			7482
330			CHILLER WALL PACKS	20/1	9	B	10	–	*			7482
		3048	CT–FAN–1	20/3	11	C	12	–	*			7482
		3048*		–	13	A	14	35/3	VFD–CP1			7482
		3048*		–	15	B	16	–	*			7482
		3048	CT–FAN–2	20/3	17	C	18	–	*			7482
		3048*		–	19	A	20	35/3	VFD–CP2			7482
		3048*		–	21	B	22	–	*			7482
			SPARE	20/1	23	C	24	–	*			7482
			SPARE	20/1	25	A	26	35/3	VFD–CP3			7482
			SPARE	20/1	27	B	28	–	*			7482
			SPARE	20/1	29	C	30	–	*			7482

VA:L (LIGHTING)	827	CONNECTED	1034	DEMAND
VA:R (RECEPTACLES)	540	CONNECTED	540	DEMAND
VA:O (OTHER)	130518	CONNECTED	130518	DEMAND
VA: TOTAL	131885	CONNECTED	132092	DEMAND
AMPS: TOTAL	159	CONNECTED	159	DEMAND

L	R	O		TOTAL		
497	540	36024	VA CONNECTED TO A PHASE	37061	VA =	134 AMPS CONNECTED TO A PHASE @ 277 VOLTS
330		36024	VA CONNECTED TO B PHASE	36354	VA =	131 AMPS CONNECTED TO B PHASE @ 277 VOLTS
		36024	VA CONNECTED TO C PHASE	36024	VA =	130 AMPS CONNECTED TO C PHASE @ 277 VOLTS
827	540	108072	TOTAL	109439	VA	

PANELBOARD RCPL

VOLTAGE: 208Y/120 VOLT 3 PHASE 4 WIRE — LOCATION: PENTHOUSE
100A MAIN LUGS ONLY — MOUNTING: SURFACE
BUSES: MAIN – 100A; NEUTRAL – 100%; EQUIPMENT GROUND; — Isc = 14,000 A RMS SYM AVAILABLE

VA:L	VA:R	VA:O	LOAD	BKR	CKT	PH	CKT	BKR	LOAD	VA:L	VA:R	VA:O
	540		RECEPTACLES: ROOF (CHILLER)	20/1	1	A	2	20/1	SPARE			
			SPARE	20/1	3	B	4	20/1	SPARE			
			SPARE	20/1	5	C	6	20/1	SPARE			
			SPARE	20/1	7	A	8	20/1	SPARE			
			SPARE	20/1	9	B	10	20/1	SPARE			
			SPARE	20/1	11	C	12	20/1	SPARE			
			SPARE	20/1	13	A	14	20/1	SPARE			
			SPARE	20/1	15	B	16	20/1	SPARE			
			SPARE	20/1	17	C	18	20/1	SPARE			
			SPARE	20/1	19	A	20	20/1	SPARE			
			SPARE	20/1	21	B	22	20/1	SPARE			
			SPARE	20/1	23	C	24	20/1	SPARE			

VA:L (LIGHTING)		CONNECTED		DEMAND
VA:R (RECEPTACLES)	540	CONNECTED	540	DEMAND
VA:O (OTHER)		CONNECTED		DEMAND
VA: TOTAL	540	CONNECTED	540	DEMAND
AMPS: TOTAL	1	CONNECTED	1	DEMAND

L	R	O		TOTAL		
	540		VA CONNECTED TO A PHASE	540	VA =	5 AMPS CONNECTED TO A PHASE @ 120 VOLTS
			VA CONNECTED TO B PHASE		VA =	AMPS CONNECTED TO B PHASE @ 120 VOLTS
			VA CONNECTED TO C PHASE		VA =	AMPS CONNECTED TO C PHASE @ 120 VOLTS
	540		TOTAL	540	VA	

PANEL SCHEDULES

PANEL NAME	NUMBER OF SECTIONS	SHEET LOCATION
"KE"	1	E2.1
"ELDPH"	1	E1.0
"ELDPL"	1	E1.0
"RCPH"	1	E2.4
"RCPL"	1	E2.4

01 ELECTRICAL PANEL SCHEDULES
SCALE:N.T.S.

HALFF
5000 WEST MILITARY, SUITE 100
McALLEN, TEXAS 78503
TEL (956) 664-0286
FAX (956) 664-0282
Halff Associates firm registration number is 312

100% PRICING SET

REVISIONS

The Reese
Phase I
202 S. 1st. Street
Harlingen, TX

ELECTRICAL
PANEL SCHEDULES

MEGAMORPHOSIS
- ARCHITECTURE & INTERIOR DESIGN
1409 N. STUART PLACE RD., SUITE D
PHONE #(956) 428-1779 FAX # (956) 425-5886

PROJECT # 27074
MAR. 26, 2010
E-6.2

KITCHEN EQUIPMENT ELECTRICAL CONNECTION SCHEDULE

No.	Conn.	Service To:	Rating	Volts	Ph.	FED FROM	BRANCH CIRCUIT	Loc.	AFF	Remarks
E1	JB	DOUBLE FRYER	5.0 A	120	1	PANEL 1K1L	2#12, 1#12G, 1/2"C	WALL	2'0"	DR OUTLETS MOUNTED ON WALL. SHUNT TRIP CIRCUIT.
E2	DR	6 BURNER HOT PLATE	3.5 A	120	1	PANEL 1K1L	2#12, 1#12G, 1/2"C	WALL	15"	NONE
E3	DR	CHARBROILER	1.0 A	120	1	PANEL 1K1L	2#12, 1#12G, 1/2"C	WALL	42"	NONE
E4	SR	BACK BAR COOLER	8.5 A	120	1	PANEL 1D1L	2#12, 1#12G, 1/2"C	WALL	15"	FURNISH AND INSTALL A NEMA 5-15R RECEPTACLE
E5	SR	GLASS DOOR MERCHANDISER	4.1 A	120	1	PANEL 1D1L	2#12, 1#12G, 1/2"C	WALL	15"	FURNISH AND INSTALL A NEMA 5-15R RECEPTACLE
E6	SR	SINGLE GLASS DR. REF.	8.9 A	120	1	PANEL 1K1L	2#12, 1#12G, 1/2"C	WALL	15"	FURNISH AND INSTALL A NEMA 5-15R RECEPTACLE
E7	SR	HORIZ. BTL. COOLER	9.2 A	120	1	PANEL 1D1L	2#12, 1#12G, 1/2"C	WALL	15"	FURNISH AND INSTALL A NEMA 5-15R RECEPTACLE
E8	--	REFRIGERATED BASE (NOT USED)	---	---	–	---	---	---	–	---
E9	SR	PIZZA PREP. TABLE	8.6 A	120	1	PANEL 1K1L	2#12, 1#12G, 1/2"C	WALL	15"	FURNISH AND INSTALL A NEMA 5-15R RECEPTACLE
E10	SR	PASS THRU GLASS DOOR REF.	7.3 A	120	1	PANEL 1K1L	2#12, 1#12G, 1/2"C	WALL	15"	FURNISH AND INSTALL A NEMA 5-15R RECEPTACLE
E11	SR	REACH IN- REFRIGERATOR	4.7 A	120	1	PANEL 1K1L	2#12, 1#12G, 1/2"C	WALL	15"	FURNISH AND INSTALL A NEMA 5-15R RECEPTACLE
E12	SR	REACH IN-FREEZER	11.3 A	120	1	PANEL 1K1L	2#12, 1#12G, 1/2"C	WALL	15"	FURNISH AND INSTALL A NEMA 5-15R RECEPTACLE
E13	SR	UNDER COUNTER REF.	5.7 A	120	1	PANEL 1K1L	2#12, 1#12G, 1/2"C	WALL	15"	FURNISH AND INSTALL A NEMA 5-15R RECEPTACLE
E14	JB/DS	20 QT. MIXER	8.0 A	120	1	PANEL 1K1L	2#12, 1#12G, 1/2"C	WALL	42"	?
E15	JB	DISHWASHER	24.6 A	208	3	PANEL 1K1L	3#8, 1#10G, 3/4"C	WALL	23"	BOOSTER HEATER AND DISHWASHER COMMON ELECTRICAL CONNECTION.
E16	JB	GLASSWASHER	15.4 A	120	1	PANEL 1D1L	2#12, 1#12G, 1/2"C	WALL	32"	PRE-WIRED BY KEC TO CONNECTION AT WALL.
E17	--	40 QT. MIXER (NOT USED)	--	--	–	---	---	---	–	---
E18	JB	OVEN/STEAMER	38.6 A	208	3	PANEL 1K1L	4#6, 1#10G, 1"C	WALL	30"	PRE-WIRED BY KEC TO CONNECTION AT WALL.
E19	SR	GAS ROTISSERIE	15.0 A	120	1	PANEL 1D1L	2#12, 1#12G, 1/2"C	WALL	15"	FURNISH AND INSTALL A NEMA 5-15R RECEPTACLE
E20	JB	QUICKCHILLER	15.0 A	208	1	PANEL 1K1L	2#12, 1#12G, 1/2"C	WALL	15"	PRE-WIRED BY KEC TO CONNECTION AT WALL.
E21	SR	COMMERCIAL MICROWAVE	13.2 A	120	1	PANEL 1K1L	2#12, 1#12G, 1/2"C	WALL	42"	FURNISH AND INSTALL A NEMA 5-15R RECEPTACLE
E22	--	WORK BURNER	--	--	–	---	---	---	–	---
E23	JB	PASTA COOKER (CPE-1)	25.5 A	220	3	PANEL 1K2L	3#8, 1#10G, 3/4"C	WALL	30"	PRE-WIRED BY KEC TO CONNECTION AT WALL.
E23	JB	PASTA COOKER (CPE-2)	51.0 A	220	3	PANEL 1K2L	3#4, 1#8G, 1"C	WALL	30"	PRE-WIRED BY KEC TO CONNECTION AT WALL.
E23	JB	PASTA COOKER (CPE-3)	76.5 A	220	3	PANEL 1K2L	3#3, 1#8G, 1"C	WALL	30"	PRE-WIRED BY KEC TO CONNECTION AT WALL.
E24	JB	ICE CUBER	16.0 A	208	1	PANEL 1K1L	2#12, 1#12G, 1/2"C	WALL	15"	PRE-WIRED BY KEC TO CONNECTION AT WALL.
E25	JB	FORNO OVEN	15.0 A	120	1	PANEL 1D1L	2#12, 1#12G, 1/2"C	WALL	68"	PRE-WIRED BY KEC TO CONNECTION AT WALL.
E26	JB	DECK OVEN	25.0 A	208	3	PANEL 1K2L	3#10, 1#10G, 1/2"C	WALL	60"	PRE-WIRED BY KEC TO CONNECTION AT WALL.
E27	JB	TILTING SKILLET	20.8 A	208	3	PANEL 1K1L	3#10, 1#10G, 1/2"C	WALL	30"	PRE-WIRED BY KEC TO CONNECTION AT WALL.
E28	JB	JACKETED KETTLE	17.5 A	208	3	PANEL 1K1L	3#12, 1#10G, 1/2"C	WALL	42"	PRE-WIRED BY KEC TO CONNECTION AT WALL.
E29	--	GRIDDLE	--	--	–	---	---	---	–	---
E30	DR	8 BURNER HOT PLATE	1.0 A	120	1	PANEL 1K1L	2#12, 1#12G, 1/2"C	WALL	15"	NONE
E31	SR	HEATING/PROOFING CABS	16.0 A	120	1	PANEL 1K1L	2#12, 1#12G, 1/2"C	WALL	15"	FURNISH AND INSTALL A NEMA 5-20R RECEPTACLE
E32	SR	TEA BREWER	14.4 A	120	1	PANEL 1D1L	2#12, 1#12G, 1/2"C	WALL	42"	FURNISH AND INSTALL A NEMA 5-15R RECEPTACLE
E33	SR	AIRPOT BREWER	11.4 A	120	1	PANEL 1D1L	2#12, 1#12G, 1/2"C	WALL	42"	FURNISH AND INSTALL A NEMA 5-15R RECEPTACLE
E34	--	FROZEN DRING MACHINE (NOT USED)	--	--	–	---	---	---	–	---
E35	JB	COUNTER TOP BATCH FREEZER	16.0 A	220	1	PANEL 1K1L	2#12, 1#12G, 1/2"C	WALL	42"	PRE-WIRED BY KEC TO CONNECTION AT WALL.
E36	JB	FROZEN DRINK MACHINE	15.8 A	120	1	PANEL 1K1L	2#12, 1#12G, 1/2"C	WALL	42"	PRE-WIRED BY KEC TO CONNECTION AT WALL.
E37	--	MARGATIRA MACHINE (NOT USED)	--	--	–	---	---	---	–	---
E38		SHRIMP PEELER	?	?	?	?	?	?	?	?
E39	SR	UNDERCOUNTER SOLID DOOR FREEZER	8.3 A	120	1	PANEL 1K1L	2#12, 1#12G, 1/2"C	–	–	FURNISH AND INSTALL A NEMA 5-15R RECEPTACLE
E40	--	OPEN BASE AND CASTERS	--	--	–	---	---	---	–	---
E41	--	BKSPLSH. AND CASTERS	--	--	–	---	---	---	–	---
E42	--	UNDERSHELF AND CASTERS	--	--	–	---	---	---	–	---
E43	--	THREE COMPARTMENT SINK	--	--	–	---	---	---	–	---
E44	--	HANDSINK	--	--	–	---	---	---	–	---
E45	JB/DS	WALK IN COOLER/FREEZER	?	120	3	PANEL KE				
E46	--	POT AND KETTLE FILLNG FAUCET	--	--	–	---	---	---	–	---
E47	--	WATER AND ICE STATION	--	--	–	---	---	---	–	---
E48	DR	GAS INFRARED CHEESEMELTER	2.0 A	120	1	PANEL 1K1L	2#12, 1#12G, 1/2"C	WALL	15"	?
E49	DR	ESPRESSO MACHINE LINEA	2.0 A	120	1	PANEL 1D1L	2#12, 1#12G, 1/2"C	WALL	42"	?
E50	DR	MINI COFFEE BEAN GRINDER	2.0 A	120	1	PANEL 1D1L	2#12, 1#12G, 1/2"C	WALL	42"	?
E51	--	BLENDER STATION	--	--	–	---	---	---	–	---
E52	DR	BEEHIVE BLENDER	2.0 A	120	1	PANEL 1D1L	2#12, 1#12G, 1/2"C	WALL	42"	?
E53	DR	CARBONATOR	2.0 A	120	1	PANEL 1K1L	2#12, 1#12G, 1/2"C	WALL	15"	?
E54	--	COCKTAIL UNIT 36"	--	--	–	---	---	---	–	---
E55	--	COCKTAIL UNIT 24"	--	--	–	---	---	---	–	---
E56	DR	CARBONATOR	3.0 A	120	1	PANEL 1D1L	2#12, 1#12G, 1/2"C	WALL	15"	?
E57	--	BAR SINK	--	--	–	---	---	---	–	---
E58	DR	ICE CRUSHER	2.0 A	120	1	PANEL 1K1L	2#12, 1#12G, 1/2"C			?
E59	DR	WINE COOLER	2.0 A	120	1	PANEL 1D1L	2#12, 1#12G, 1/2"C			?
E60	SR	SOLID DOOR PIZZA PREP TABLE	8.6 A	120	1	PANEL 1D1L	2#12, 1#12G, 1/2"C	WALL	15"	FURNISH AND INSTALL A NEMA 5-15R RECEPTACLE
E61	SR	DRAWERED PIZZA PREP TABLE	8.6 A	120	1	PANEL 1K1L	2#12, 1#12G, 1/2"C	WALL	15"	FURNISH AND INSTALL A NEMA 5-15R RECEPTACLE
E62	DR	POS SYSTEM	1.0 A	120	1	PANEL 1D1L	2#12, 1#12G, 1/2"C	WALL	42"	?
E63	DR	BUMP SCREEN	2.0 A	120	1	PANELS 1D1L/1K1L	2#12, 1#12G, 1/2"C	CLG		?
E64	?	COMMAND								
E65	--	BAR MAT	--	--	–	---	---	---	–	---
E66	JB	FOOD WASTE DISPOSER	9.0 A	208	3	PANEL 1K2L	3#12, 1#12G, 1/2"C	WALL	30"	PRE-WIRED BY KEC TO CONNECTION AT WALL.

01 ELECTRICAL KITCHEN SCHEDULE
SCALE:N.T.S.

ELEC. EQUIP. CONN. SCHED. ABBREVIATIONS:	
DR	20 AMP DUPLEX RECEPTACLE
JB	JUNCTION BOX
SR	SINGLE PURPOSE RECEPTACLE
DCR	DROP CORD RECEPTACLE
JB/DS	JUNCTION BOX WITH DISCONNECT
BTC	BRANCH TO CONNECTION ON EQUIP.
DFA	DROP FROM ABOVE

ELEC. EQUIP. CONN. SCHED. NOTES:
1. FIELD INSTALL ACCESSORIES AND FITING PROVIDED LOOSE WITH FOOD SERVICE EQUIPMENT.
2. PROVIDE STAINLESS STEEL DISCONNECT SWITCH.
3. PROTECT CIRCUIT WITH SHUNT TRIP BREAKER FOR AUTOMATIC SHUT-OFF DURING FIRE MODE.
4. DOOR HTRS, LTS, AND PRESSURE RELIEF VALVE PORTS PREWIRED TO J-BOX AT TOP OF FRZR OR COOLER.

02 KITCHEN EQUIP. CONN. SCHED. ABBREVIATIONS & NOTES
SCALE: N.T.S.

HALFF
5000 WEST MILITARY, SUITE 100
McALLEN, TEXAS 78503
TEL (956) 664-0286
FAX (956) 664-0282
Halff Associates firm registration number is 312

100% PRICING SET

REVISIONS

The Reese
Phase I
202 S. 1st. Street
Harlingen, TX

ELECTRICAL KITCHEN SCHEDULES

MEGAMORPHOSIS
- ARCHITECTURE & INTERIOR DESIGN
1409 N. STUART PLACE RD., SUITE D
PHONE #(956) 428-1779 FAX # (956) 425-5898

PROJECT # 27074
MAR. 26, 2010
E-6.3

LIGHTING FIXTURE SCHEDULE

TYPE	MANUF & MODEL NUMBER	LAMPS	VA	VOLTAGE	DESCRIPTION	NOTES
A	LITHONIA – #LTC WRFM PAR 38 DBL	3-75WPAR30	4100K 225	120	PAR30 LINE VOLTAGE LAMP HEADS ON 4' TWO-CIRCUIT TRACK PN# '1.214 DBL', WITH STEM FEED KIT PN# 'LTAP2 DBL' AND STEM KIT PN# 'LTAP1 24 DBL' FOR 24" SUSPENSION LENGTH	1
B	CUSTOM CHANDELIER	INCANDESCENT	4100K 300	120	CUSTOM CHANDELIER BY GUY MATTEI	
C	PEACHTREE – #PCTK-626-DIM	2-26W PLT	4100K 52	120	ARCHITECTURAL CYLINDRICAL WALL SCONCE, DARK BRONZE PROVIDE WITH DIMMABLE BALLAST	1
D	ET2 – #E22093-26	12-G9	4100K 480	120	LALIQUE 12-LIGHT PENDANT, BRONZE FINISH, AMBER MURANO GLASS	
F	LITHONIA – #CFV8 32TRT 6 AR 120 ADEZ DBL	1-32W TRT	4100K 35	120	DOWN LIGHT, COMPACT FLUORESCENT 6" CYLINDER, BLACK PROVIDE WITH DIMMABLE BALLAST	1
G	EGLO – #85055 YOLA	7-G9	4100K 280	240	PENDANT FLUORESCENT LIGHT , 42" FIXTURE	
H	LITHONIA – #TS 1 32 MVOLT GEB10IS	1-F32W T8	4100K 36	120	4' NARROW STRIPLIGHT, 1 LAMP, SUSPENDED	
J	STARFIRE – #1 ULT-144-48-FF-24-AM		4100K	120	12' ULTRAFLEX ROPE LIGHT, PROVIDE WITH ST-1 -5 SINGLE CIRCUIT POWER FEED AND BP-1-10 BI-PIN CONNECTORS, REQUIRES TR-75 TRANSFORMER	
K	LITHONIA – #2SP8 G 3 32 FW A12125 MVOLT GEB10IS ABC LP741	3-F32WT8	4100K 94	120	2'X4' LAY-IN TROFFERWITH NOMINAL 0.125 INCH THICK INVERTED PATTERN 12 ACRYLIC LENS AND GASKETING BETWEEN LENS/DOOR, DOOR/FRAME AND FRAME/CEILING, PROVIDE WITH DUAL BALLAST	
KE	LITHONIA – #2SP8 G 3 32 FW A12125 MVOLT GEB10IS EL14 ABC LP741	3-F32WT8	4100K 94	120	2'X4' LAY-IN TROFFERWITH NOMINAL 0.125 INCH THICK INVERTED PATTERN 12 ACRYLIC LENS AND GASKETING BETWEEN LENS/DOOR, DOOR/FRAME AND FRAME/CEILING, PROVIDE WITH DUAL BALLAST, PROVIDE WITH EMERGENCY BATTERY PACK	
L	GOTHAM – #CA6 6MB PM DDB CYS	1-150WPAR38	4100K 150	120	HEAT LAMP, PENDANT MOUNT, PROVIDE WITH 3/8" STEM AND CANOPY, COORDINATE SUSPENSION LENGTH WITH ARCHITECT, DARK BRONZE	
M	LITHONIA – #2SP8 332 A12125 MVOLT GEB10IS LP741	3-F32W T8	4100K 94	120	2'X4', LENSED TROFFER, 3-LAMP FLUORESCENT RECESSED, PROVIDE WITH DUAL BALLAST	
ME	LITHONIA – #2SP8 332 A12125 MVOLT GEB10IS EL LP741	3-F32W T8	4100K 94	120	2'X4', LENSED TROFFER, 3-LAMP FLUORESCENT RECESSED, WITH EMERGENCY BATTERY PACK, PROVIDE WITH DUAL BALLAST	
N	BEVOLO – #SIX SIDED RODIN				ANTIQUE GAS LANTERN, PROVIDE WITH THERMOCOUPLE 'E-TH' FOR AUTOMATIC SHUT-OFF	
P	PEERLESS – #ICW8 2 32 R4 277 GEB10 SCT LP741 C041	2-F32W T8	4100K 71	277	BAFFLE, WALL MOUNT, 4FT SECTIONS PROVIDE WITH DUAL BALLAST	
PE	PEERLESS – #ICW8 2 32 R4 277 GEB10 1SE EL SCT LP741 C041	2-F32W T8	4100K 71	277	BAFFLE, WALL MOUNT, 4FT SECTIONS WITH EMERGENCY BATTERY PACK, PROVIDE WITH DUAL BALLAST	
Q	LITHONIA – #AFV 32TRT 6AR 120 F32TRT/41	1-32W TRT	4100K 35	120	6" RECESSED DOWN LIGHT	
QE	LITHONIA – #AFV 32TRT 6AR 120 EL14 F32TRT/41	1-32W TRT	4100K 35	120	6" RECESSED DOWN LIGHT PROVIDE WITH EMERGENCY BATTERY PACK	
R	LITHONIA – #AFV 32TRT 6AR 120 ADEZ F32TRT/41	1-32W TRT	4100K	120	6" RECESSED DOWN LIGHT , WITH DIMMABLE BALLAST	1
S	LITHONIA – #C 2 32 MVOLT GEB10IS WGCUN NST	2-F32W T8	4100K 71	277	4' INDUSTRIAL FLUORESCENT STRIP WITH WIRE GUARD	
SE	LITHONIA – #C 2 32 MVOLT GEB10IS EL WGCUN NST	2-F32W T8	4100K 71	277	4' INDUSTRIAL FLUORESCENT STRIP WITH WIRE GUARD PROVIDE WITH EMERGENCY BATTERY PACK	
X	LITHONIA – #LQM S W 3 R 120/277 EL N SD	INCLUDED	6	120/277	POLYCARBONATE EMERGENCY EXIT LIGHT, LED LAMPS, SINGLE FACE, PROVIDE WITH EMERGENCY BATTERY PACK	
X2	LITHONIA – #LQM S W 3 R 120/277 EL N SD	INCLUDED	6	120/277	POLYCARBONATE EMERGENCY EXIT LIGHT, LED LAMPS, DOUBLE FACE, PROVIDE WITH EMERGENCY BATTERY PACK	
AA	BEVOLO – #SIX SIDED LONDON STREET				SPIDER POST MOUNT GAS LANTERN FOR PATIO	
BB	LSI – #RDB-100MH-277-FLV-RGB	1-100W MH	4100K 110	277	13" INGRADE LIGHT, METAL HALIDE, PROVIDE WITH BRASS ROCK GUARD	
CC	LITHONIA – #WSR 100MH WTU MVOLT SF WLU LPI UCS DWHG	1-100W MH	4100K 110	277	ARCHITECTURAL WALL-MOUNTED LIGHT, METAL HALIDE, DARK BRONZE, WIDE THROW WITH 10% UPLIGHT, PROVIDE WITH UPLIGHT COMPONENT SHIELD AND WET LOCATION DOOR FOR UP ORIENTATION	
FF	LITHONIA –#TWL-42TRT 277 LPI DMB	1-42W	4100K 46	277	WALL PACK FOR WET LOCATIONS	
DD	LITHONIA –#ASF2 WDF 277 AFSTM SCWA LPI ASF1BD DDBT	1-250W	4100K 295	277	ARCHITECTURAL FLOOD LIGHT, METAL HALIDE, WIDE FLOOD, PROVIDE WITH GENERAL PURPOSE STANCHION MOUNT AND BARN DOORS	

NOTES:

1. DIMMING BALLAST SHALL BE LUTRON OR ADVANCE MARK X TYPE

01 ELECTRICAL FIXTURE SCHEDULE

SCALE: N.T.S.

LRP- A LEVITON Z-MAX RELAY CABINET CAT # R24MD-XX WITH RELAYS SHOWN ON SCHEDULE

RELAY / CIRCUIT		CONTROL			LOAD CIRCUITS			
RELAY NO.	PANEL-BREAKER	DIGITAL SW#/ BTN#	LOW VOLT SW#/BTN#	SWEEP	RELAY TYPE	FIELD CIRCUIT	LOAD WATTS	NOTES
1	1K2L-63	1/1			STD	1K2L-63A	--	HEAT LAMPS
2	1K2L-63	1/2			STD	1K2L-63B	--	PIZZA BAR ROPE LTS
3	1K2L-73	2/1			STD	1K2L-73A	--	WAITING STATION 105
4	1K2L-67	3/1			STD	1K2L-67A	--	CORRIDOR 121
5	1K2L-69	4/1, 5/1			STD	1K2L-69A	--	KITCHEN 109: INNER LAMPS
6	1K2L-69	4/2, 5/2			STD	1K2L-69A	--	KITCHEN 109: OUTER LAMPS
7	1K2L-71	4/1, 5/1			STD	1K2L-71A	--	KITCHEN 110: INNER LAMPS
8	1K2L-71	4/2, 5/2			STD	1K2L-71A	--	KITCHEN 110: OUTER LAMPS
9	1K2L-69	4/3, 5/3			STD	1K2L-69B	--	KITCHEN 109: DOWNLIGHTS
10	1K2L-71	4/3, 5/3			STD	1K2L-71B	--	KITCHEN 110: DOWNLIGHTS
11	1K2L-67	6/1			STD	1K2L-67B	--	RESTROOM 118
12	1K2L-67	7/1			STD	1K2L-67C	--	RESTROOM 120
13	1K2L-67	8/1			STD	1K2L-67D	--	RESTROOM 119
14-24	SPARE				STD		--	

KEY:
(SW#/BTN) = SWITCH STATION ID # / BUTTON #
(DIGITAL SWITCH) = LEVITON Z-MAX #ZMDSW
(SWEEP SWITCH) = WATTSTOPPER AS100 AUTOMATIC CONTROL SWITCH
(LOW VOLT SWITCH) = LEVITON LOW VOLTAGE SWITCHES

RELAY TYPES:
(STD) SINGLE POLE, 120/277V 20A ZMAX
(2PL) 2 POLE, 208 – 480V, 20A
(ST SEN S) SENTRY SWITCH SHORT, SINGLE POLE, 120/277V 20A
(1NC) 1-POLE NORMALLY CLOSED 120V – 347V

LRP- B LEVITON Z-MAX RELAY CABINET CAT # R8MD-XX WITH RELAYS SHOWN ON SCHEDULE

RELAY / CIRCUIT		CONTROL			LOAD CIRCUITS			
RELAY NO.	PANEL-BREAKER	DIGITAL SW#/ BTN#	LOW VOLT SW#/BTN#	SWEEP	RELAY TYPE	FIELD CIRCUIT	LOAD WATTS	NOTES
1	1RS1H-13	--			STD	1RS1H-13	--	SITE LIGHTS ON TIMECLOCK AND PHOTOCELL
2	1RS1H-15	--			STD	1RS1H-15	--	SITE LIGHTS ON TIMECLOCK AND PHOTOCELL
3	1RS1H-17	--			STD	1RS1H-17	--	SITE LIGHTS ON TIMECLOCK AND PHOTOCELL
4	1RS1H-27	--			STD	1RS1H-27	--	BUILDING SIGN LIGHTS ON TIMECLOCK AND PHOTOCELL
5	1RS1H-37	--			STD	1RS1H-37	--	SITE LIGHTS ON TIMECLOCK AND PHOTOCELL
6	1RS1H-35	--			STD	1RS1H-35	--	SITE LIGHTS ON TIMECLOCK AND PHOTOCELL
7	1RS1H-41	--			STD	1RS1H-41	--	SITE LIGHTS ON TIMECLOCK AND PHOTOCELL
8	1RS1H-39	--			STD	1RS1H-39	--	SITE LIGHTS ON TIMECLOCK AND PHOTOCELL

KEY:
(SW#/BTN) = SWITCH STATION ID # / BUTTON #
(DIGITAL SWITCH) = LEVITON Z-MAX #ZMDSW
(SWEEP SWITCH) = WATTSTOPPER AS100 AUTOMATIC CONTROL SWITCH
(LOW VOLT SWITCH) = LEVITON LOW VOLTAGE SWITCHES

RELAY TYPES:
(STD) SINGLE POLE, 120/277V 20A ZMAX
(2PL) 2 POLE, 208 – 480V, 20A
(ST SEN S) SENTRY SWITCH SHORT, SINGLE POLE, 120/277V 20A
(1NC) 1-POLE NORMALLY CLOSED 120V – 347V

02 LIGHTING CONTROL RELAY SCHEDULES

SCALE: N.T.S.

Restaurant LCP Dimming Panel Load Schedule

Panel Name:
Lutron Model No.:
Panel Address / Location:

Area/Room	Customer Circuit #	Lutron Circuit #	Circuit Description	Load Type	Actual Load (W/VA)	Max. Load (W/VA)	BRKR Size	Phase
Restaurant	1	1	Par 30 Track "A"	Incandescent	450	2000	20A-1P	A
Restaurant	2	2	Par 30 Track "A"	Incandescent	450	2000	20A-1P	B
Restaurant	3	3	Par 30 Track "A"	Incandescent	450	2000	20A-1P	C
Restaurant	4	4	Par 30 Track "A"	Incandescent	450	2000	20A-1P	A
Restaurant	5	5	Par 30 Track "A"	Incandescent	450	2000	20A-1P	B
Restaurant	6	6	Par 30 Track "A"	Incandescent	450	2000	20A-1P	C
Restaurant	7	7	Par 30 Track "A"	Incandescent	450	2000	20A-1P	A
Restaurant	8	8	Par 30 Track "A"	Incandescent	675	2000	20A-1P	B
Restaurant	9	9	Par 30 Track "A"	Incandescent	450	2000	20A-1P	C
Restaurant	10	10	Par 30 Track "A"	Incandescent	450	2000	20A-1P	A
Restaurant	11	11	Par 30 Track "A"	Incandescent	450	2000	20A-1P	B
Restaurant	12	12	Par 30 Track "A"	Incandescent	225	2000	20A-1P	C
Restaurant	13	13	6" Downlight CFL "R"	FL – Hi-Lume	160	2000	20A-1P	A
Restaurant	14	14	Chandelier "B"	Incandescent	1500	2000	20A-1P	B
Restaurant	15	15	Chandelier "B"	Incandescent	1500	2000	20A-1P	C
Restaurant	16	16	Chandelier "B"	Incandescent	1500	2000	20A-1P	A
Restaurant	17	17	Chandelier "B"	Incandescent	1500	2000	20A-1P	B
Restaurant	18	18	Sconce CFL "C"	FL – Hi-Lume	520	2000	20A-1P	C
Restaurant	19	19	Sconce CFL "C"	FL – Hi-Lume	520	2000	20A-1P	A
Restaurant	20	20	Sconce CFL "C"	FL – Hi-Lume	520	2000	20A-1P	B
Restaurant	21	21	Sconce CFL "C"	FL – Hi-Lume	245	2000	20A-1P	C
Restaurant	22	22	6" Downlight CFL "R"	Incandescent	25	2000	20A-1P	A
Restaurant	23	23	Spare	Incandescent	25	2000	20A-1P	B
Restaurant	24	24	Spare	Incandescent	25	2000	20A-1P	C

120/208V, 3Ø-4 Wire Main Lugs LCP SpecGrade Dimming Panel containing 1 20A-1Pole branch breaker rated at 10,000AIC for each of the 24 dimming circuits. Max input feed = 175A

Phase A: 4005 W/VA
Phase B: 5570 W/VA
Phase C: 4281 W/VA

03 DIMMING CONTROL PANEL SCHEDULE

SCALE: N.T.S.

GENERAL NOTES: ( )

(A) REFER TO 02/E7.3 FOR CONNECTION DETAIL.

HALFF
5000 WEST MILITARY, SUITE 100
McALLEN, TEXAS 78503
TEL (956) 664-0286
FAX (956) 664-0282
Halff Associates firm registration number is 312

100% PRICING SET

REVISIONS

The Reese
Phase I
202 S. 1st. Street
Harlingen, TX

ELECTRICAL SCHEDULES

MEGAMORPHOSIS
• ARCHITECTURE & INTERIOR DESIGN
1409 N. STUART PLACE RD., SUITE D
PHONE # (956) 428-1779 FAX # (956) 425-5886

PROJECT # 27074
MAR. 26, 2010
E-6.4

FEEDER / BRANCH CIRCUIT SCHEDULE

MARK	RACEWAY	PHASE CONDUCTORS	NEUTRAL CONDUCTORS	GROUND CONDUCTORS	REMARKS
P001	4"	x	x	x	QTY 2-4" PVC CONDUITS WITH PULL STRINGS
1000	4"	3-600KCMIL	1-600KCMIL		FIVE PARALLEL FEEDERS REQUIRED
1001	4"	3-600KCMIL	1-600KCMIL	1-250KCMIL	FIVE PARALLEL FEEDERS REQUIRED
2000	2 1/2"	3#4/0	1#4/0	1#4	----
2001	1-1/4"				FOR METER
2100	2 1/2"	3#4/0	1#4/0	1#4	----
2101	2"	3#3/0	1#3/0	1#6	----
2200	1"	3#4	----	1#8	----
2300	1 1/2"	3#1/0	1#1/0	1#6	----
3000	2"	3#3/0	1#3/0	1#1/0	FOUR PARALLEL FEEDERS REQUIRED
3001	1-1/4"				FOR METER
3100	2"	3#3/0	1#3/0	1#1/0	FOUR PARALLEL FEEDERS REQUIRED
3200	2 1/2"	3-250KCMIL	----	1#1	TWO PARALLEL FEEDERS REQUIRED
3300	3"	3-400KCMIL	1-400KCMIL	1#1/0	THREE PARALLEL FEEDERS REQUIRED
3310	1 1/2"	3#3	1#3	1#8	----
3320	2"	3#3/0	1#3/0	1#3	TWO PARALLEL FEEDERS REQUIRED
3330	2"	3#3/0	1#3/0	1#3	TWO PARALLEL FEEDERS REQUIRED
3340	1 1/2"	3#3	1#3	1#8	----
4000	2"	3#3/0	1#3/0	1#2/0	FIVE PARALLEL FEEDERS REQUIRED
4001	1-1/4"				FOR METER
4100	1 1/2"	3#3	1#3	1#8	----
4110	3/4"	3#6	----	1#10	----
4111	1 1/2"	3#3	1#3	1#8	----
FPN1000	1"	3#3	----	1#8	----
FPN1001	1"	3#3	----	1#8	----
FPE1000	1"	3#3	----	1#8	SPECIAL CONDUCTOR SEE SPECS
FPE1001	1"	3#3	----	1#8	----
FP1002	1"	3#3	----	1#8	----
E1000	1 1/2"	3#3	1#3	1#8	SPECIAL CONDUCTOR SEE SPECS
E1001	1 1/2"	3#3	1#3	1#8	----
E1002	2"	3#3/0	1#3/0	1#6	----
E1100	3/4"	3#6	----	1#10	----
E1101	1 1/2"	3#3	1#3	1#8	----
E1102	1 1/2"	3#3	1#3	1#8	----
E1200	2"	3#4/0	----	1#4	----
E1201	2"	3#3/0	1#3/0	1#3	TWO PARALLEL FEEDERS REQUIRED
E1210	2"	3#4/0	----	1#4	----
E1211	2"	3#4/0	----	1#4	----
E1220	2"	3#4/0	----	1#4	----
E1221	2"	3#4/0	----	1#4	----
	x	x	x	x	x
	x	x	x	x	x
	x	x	x	x	x
	x	x	x	x	x

01 ELECTRICAL FEEDER SCHEDULE
SCALE: N.T.S.

MECHANICAL EQUIPMENT CONNECTION SCHEDULE

CIRCUIT DESIGNATION				DISCONNECTING MEANS AND/OR BRANCH CIRCUIT SIZE
AIR HANDLING UNITS				
UNIT MARK	LOCATION	FED FROM	REMARKS	
AHU-1	2ND FLOOR	K1H1-14,16,18	2	3#6, 1#10G, 3/4"C
AHU-2	2ND FLOOR	K1H1-20,22,24	2	3#8, 1#10G, 3/4"C
AHU-3	2ND FLOOR	K1H1-26,28,30	2	3#8, 1#10G, 3/4"C
VARIABLE FREQUENCY DRIVE SCHEDULE				
VFD-KEF1	KITCHEN	1K1H-9,11,13		3#12, 1#12G, 3/4"C
VFD-KEF2	KITCHEN	1K1H-15,17,19		3#12, 1#12G, 3/4"C
VFD-KEF3	KITCHEN	1K1H-2,4,6		3#12, 1#12G, 3/4"C
VFD-CT1	PENTHOUSE	RCPH-11,13,15		3#12, 1#12G, 3/4"C
VFD-CT2	PENTHOUSE	RCPH-19,19,21		3#12, 1#12G, 3/4"C
VFD-OP1	PENTHOUSE	RCPH-2,4,6	7	3#8, 1#10G, 3/4"C
VFD-OP2	PENTHOUSE	RCPH-8,10,12	7	3#8, 1#10G, 3/4"C
VFD-CP1	PENTHOUSE	RCPH-14,16,18	7	3#8, 1#10G, 3/4"C
VFD-CP2	PENTHOUSE	RCPH-20,22,24	7	3#8, 1#10G, 3/4"C
VFD-CP3	PENTHOUSE	RCPH-26,28,30	7	3#8, 1#10G, 3/4"C
EXHAUST FAN SCHEDULE				
UNIT MARK	LOCATION	FED FROM	REMARKS	
EF-1	CORRIDOR	1K2L-39		2#12, 1#12G, 1/2"C
EF-2	KITCHEN R.R.	1K2L-41		2#12, 1#12G, 1/2"C
KEF-1	KITCHEN	VFD-KEF1		3#12, 1#12G, 3/4"C
KEF-2	KITCHEN	VFD-KEF2		3#12, 1#12G, 3/4"C
KEF-3	KITCHEN	VFD-KEF3		3#12, 1#12G, 3/4"C
KEF-4	STORAGE	1K2L-44		2#12, 1#12G, 1/2"C
KEF-5	PIZZA KITCHEN	1K1H-8,10,12		3#12, 1#12G, 3/4"C
COOLING TOWER				
UNIT MARK	LOCATION	FED FROM	REMARKS	
CT-FAN-1	PENTHOUSE	VFD-CT1		3#12, 1#12G, 3/4"C
CT-FAN-2	PENTHOUSE	VFD-CT2		3#12, 1#12G, 3/4"C
PUMP SCHEDULE				
UNIT MARK	LOCATION/*SERVES	FED FROM	REMARKS	
OP-1	PENTHOUSE	VFD-OP1	7	3#8, 1#10G, 3/4"C
OP-2	PENTHOUSE	VFD-OP2	7	3#8, 1#10G, 3/4"C
CP-1	PENTHOUSE	VFD-CP1	7	3#8, 1#10G, 3/4"C
CP-2	PENTHOUSE	VFD-CP2	7	3#8, 1#10G, 3/4"C
CP-3	PENTHOUSE	VFD-CP3	7	3#8, 1#10G, 3/4"C
ELEVATOR				
UNIT MARK	LOCATION/*SERVES	FED FROM	REMARKS	
ESP-1-1	ELEVATOR	ELDPL-9		2#12, 1#12G, 1/2"C
ESP-1-2	ELEVATOR	ELDPL-9		2#12, 1#12G, 1/2"C
MISCELLANEOUS				
UNIT MARK	LOCATION	FED FROM	REMARKS	
WSFT-1	BASEMENT	1RS1L-5		2#12, 1#12G, 1/2"C
RO-1	BASEMENT	1RS1L-7		2#12, 1#12G, 1/2"C
BP-1	BASEMENT	1RS1H-29,31,33	10	3#12, 1#12G, 1/2"C; 30/-/3P NEMA1 DISCONNET SWITCH
BP-2	ROOM 122	1RS1L-19,21	10	2#12, 1#12G, 1/2"C; 30/-/3P NEMA1 DISCONNET SWITCH
RP-1	BASEMENT	1RS1L-11		2#12, 1#12G, 1/2"C; 30/-/3P NEMA1 DISCONNET SWITCH
RP-2	BASEMENT	1RS1L-12		2#12, 1#12G, 1/2"C; 30/-/3P NEMA1 DISCONNET SWITCH
EH-1	FIRE PUMP ROOM	1RS1H-2,4,6		3#12, 1#12G, 1/2"C; 30/-/3P NEMA1 DISCONNET SWITCH
LIFT STATION SCHEDULE				
UNIT MARK	LOCATION/*SERVES	FED FROM	REMARKS	
LS-1	BASEMENT	1RS1L-6		2#12, 1#12G, 1/2"C; 30/-/3P NEMA1 DISCONNET SWITCH
LS-2	ELEVATOR ROOM 122	1RS1H-8,10,12		3#12, 1#12G, 1/2"C; 30/-/3P NEMA1 DISCONNET SWITCH

GENERAL NOTES:

A. ALL DISCONNECTS AND COMBINATION STARTERS ARE NEMA 1 ENCLOSED, UNO.

REMARKS

2. FACTORY PROVIDED INTEGRAL DISCONNECT.
3. SEPARATE HOMERUNS TO EACH WATER HEATER. CONTACT WATER HEATER SUPPLIER PRIOR TO COMMENCING.
4. FAN SHALL BE CONTROLLED THROUGH EMS .
5. FAN SHALL BE CONTROLLED THROUGH HOOD CONTROL PANEL CONTACTORS.
6. FAN SHALL BE CONTROLLED THROUGH DISHWASHER HOOD CONTROL SWITCH.
7. CONNECT POWER TO DISCONNECT SWITCH THEN TO VARIABLE FREQUENCY DRIVE THEN TO PUMP.
8. REFER TO KITCHEN HOOD FIRE SUPPRESSION SYSTEM DETAIL 01/E7.3
10. PROVIDE WITH MAGNETIC STARTER.

02 MECHANICAL EQUIPMENT CONNECTION SCHEDULE
SCALE: N.T.S.

100% PRICING SET

HALFF
5000 WEST MILITARY, SUITE 100
McALLEN, TEXAS 78503
TEL (956) 664-0286
FAX (956) 664-0282
Halff Associates firm registration number is 312

REVISIONS

The Reese
Phase I
202 S. 1st. Street
Harlingen, TX

ELECTRICAL SCHEDULES

MEGAMORPHOSIS
· ARCHITECTURE & INTERIOR DESIGN
1409 N. STUART PLACE RD., SUITE D
PHONE #(956) 428-1779 FAX # (956) 425-5886

PROJECT # 27074
MAR. 26, 2010
E-6.5

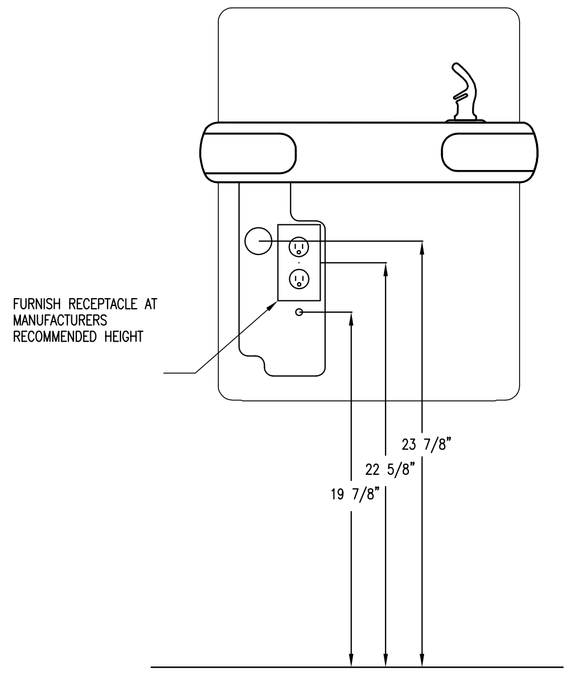

01 ELECTRIC WATER COOLER RECEPTACLE DETAIL
SCALE: N.T.S

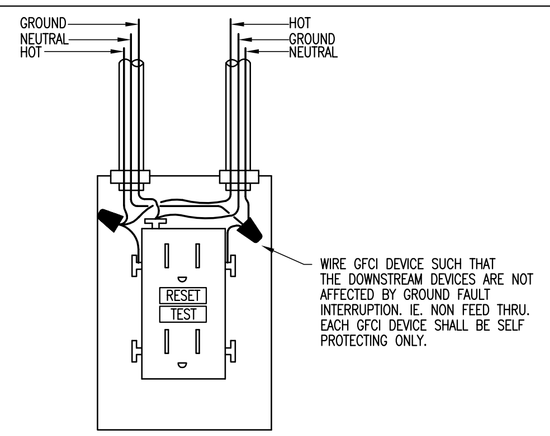

02 GFCI RECEPTACLE – WIRING DIAGRAM
SCALE:N.T.S.

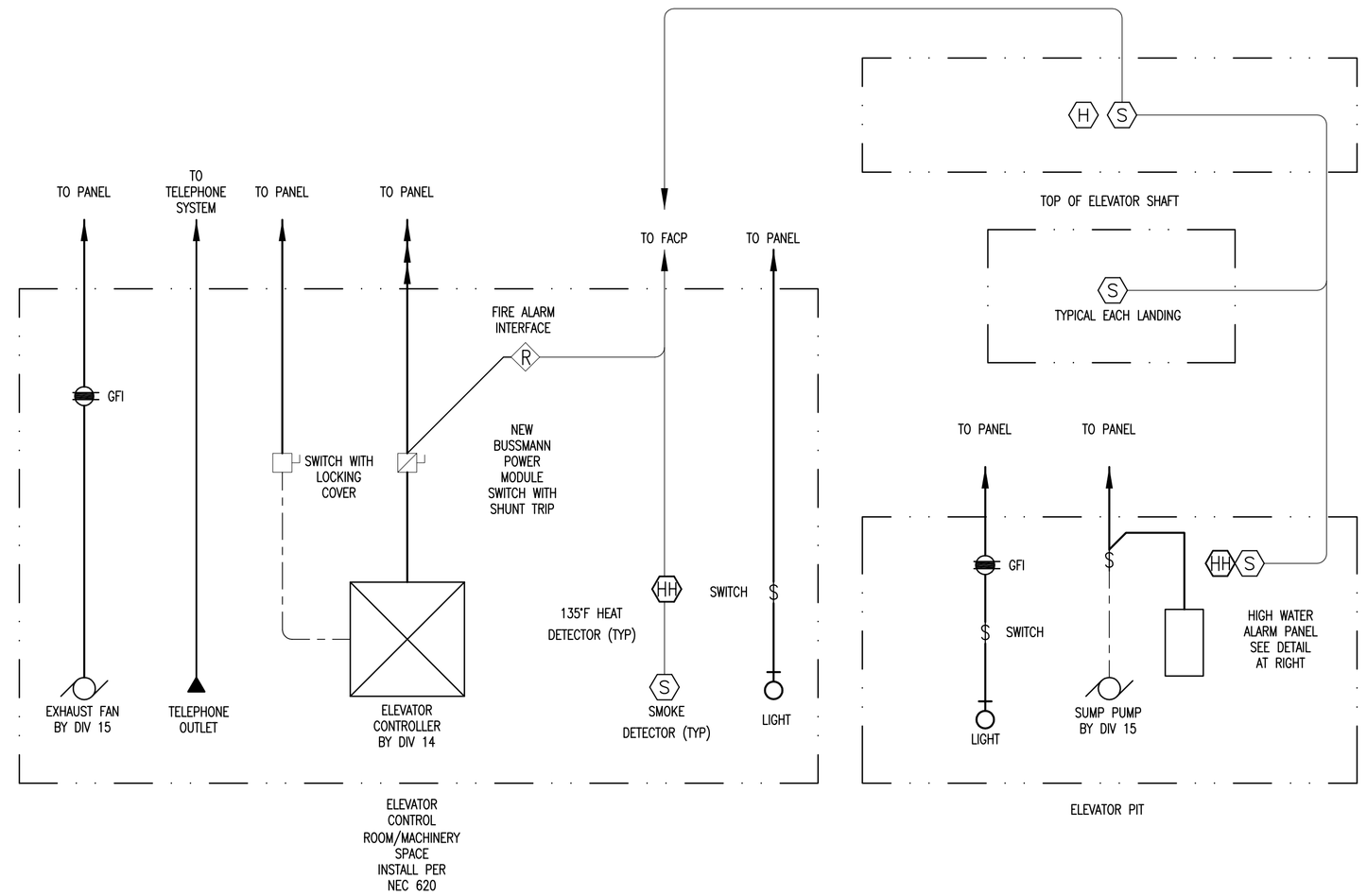

04 ELEVATOR AND PIT HIGH WATER ALARM ELECTRICAL SCHEMATIC
SCALE: N.T.S

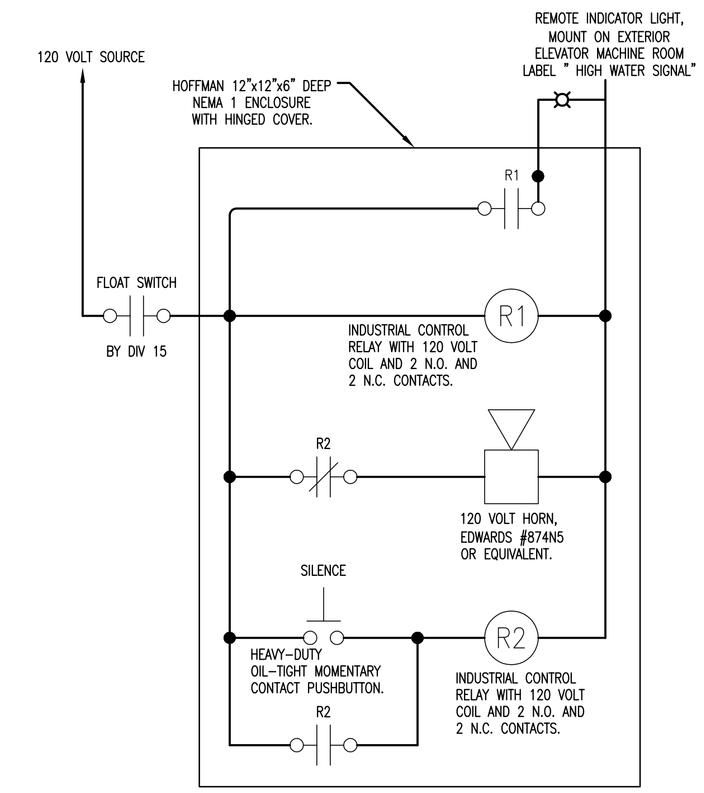

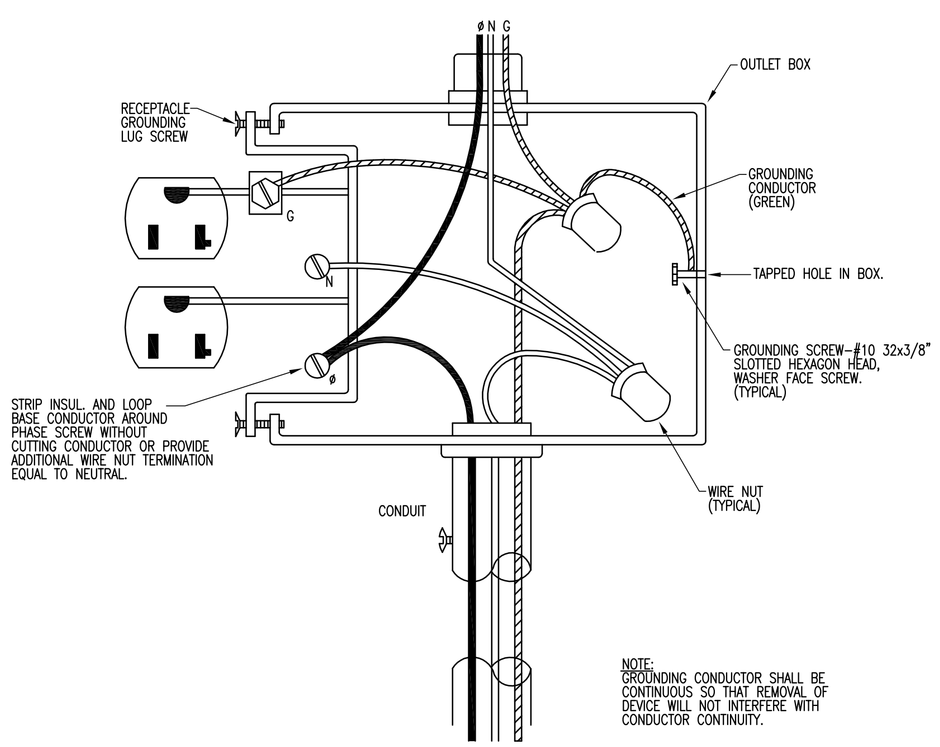

03 TYPICAL RECEPTACLE GROUNDING DETAIL
SCALE:N.T.S.

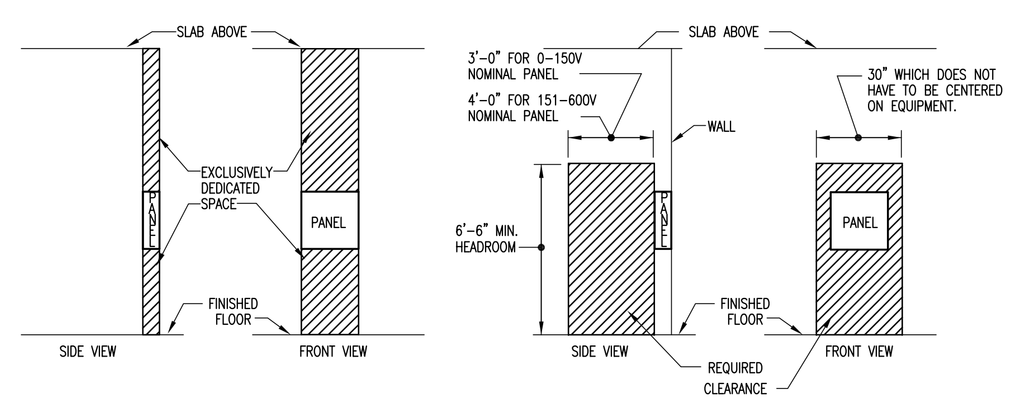

05 TYPICAL PANELBOARD REQUIRED CLEARANCE
SCALE:N.T.S.

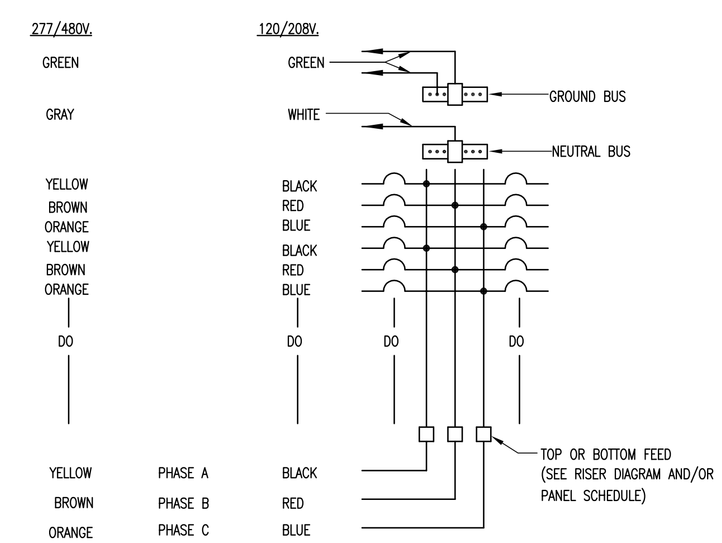

06 TYPICAL PANEL COLOR CODE DETAIL
SCALE:N.T.S.

100% PRICING SET

HALFF
5000 WEST MILITARY, SUITE 100
McALLEN, TEXAS 78503
TEL (956) 664-0286
FAX (956) 664-0282
Halff Associates firm registration number is 312

REVISIONS

The Reese
Phase I
202 S. 1st. Street
Harlingen, TX

ELECTRICAL DETAILS

MEGAMORPHOSIS
- ARCHITECTURE & INTERIOR DESIGN
1409 N. STUART PLACE RD., SUITE D
PHONE #(956) 428-1779 FAX # (956) 425-5868

PROJECT # 27074
MAR. 26, 2010
E-7.1

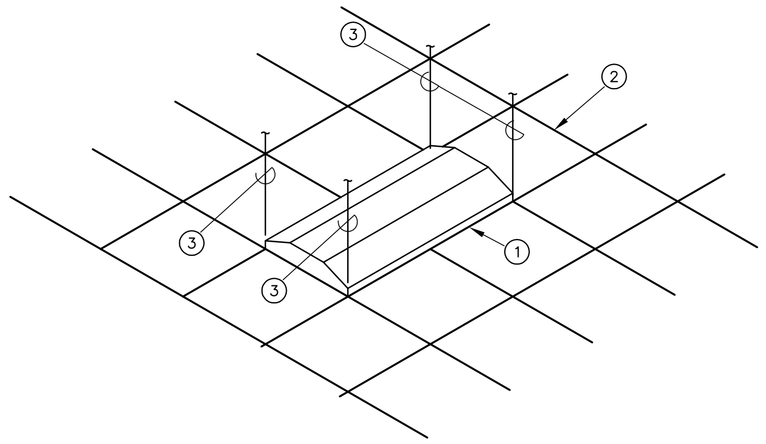

NOTES BY SYMBOL " ◯ "
(1) 2'x 4' LAY-IN FLUORESCENT FIXTURE
(2) SUSPENDED CEILING
(3) TIE WIRE, CONNECT TO ALL FOUR CORNERS OF FIXTURE TO STRUCTURE ABOVE, INDEPENDENT OF CEILING SUPPORTS.

01 TYPICAL LAY-IN FIXTURE SUPPORT
SCALE:N.T.S.

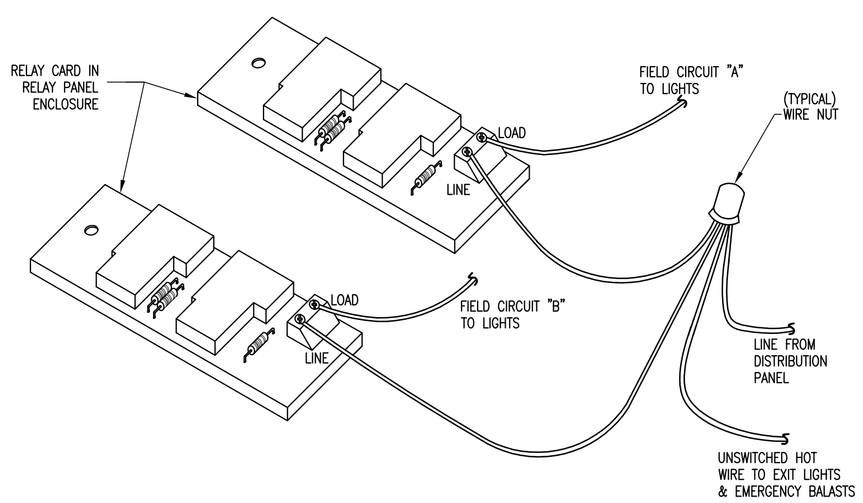

02 WIRING DIAGRAM FOR EM. LTS.
SCALE: N.T.S.

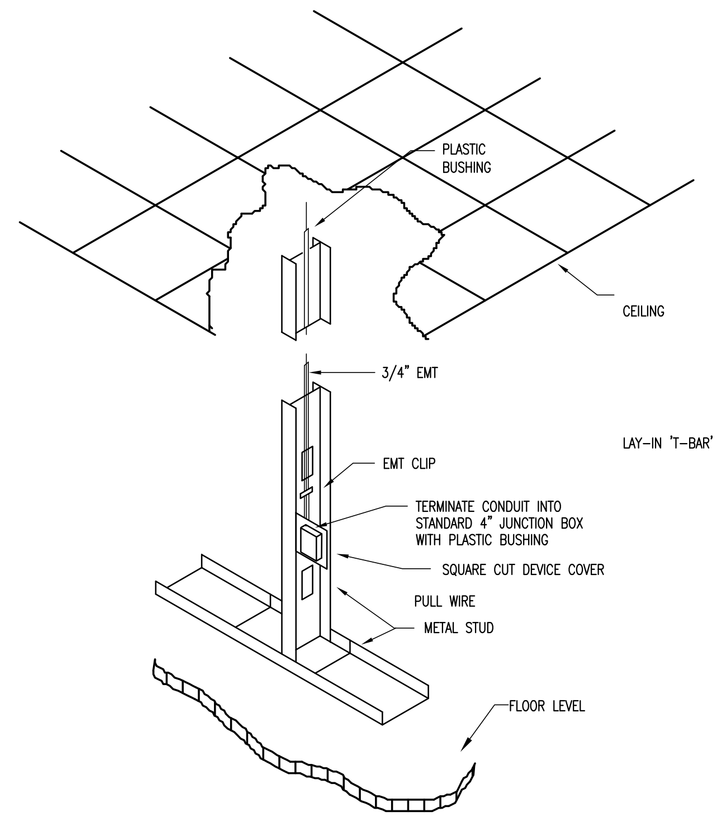

04 TELEPHONE OUTLET IN INSULATED METAL STUD WALL
SCALE:N.T.S.

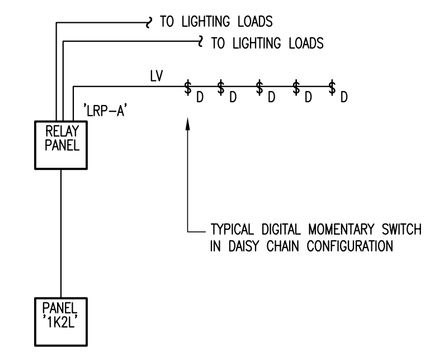

CONTROL WIRING LEGEND	
SYMBOL	WIRE TYPE(S)
LV	BELDEN 1502R BELDEN 1502P (PLENUM)
HV	(1) #12 AWG WIRE FOR SWITCH LEG (1) #12 AWG FOR HOT LEG (LINE VOLTAGE) (1) #12 AWG GROUND WIRE PER PLATE.

06 LIGHTING CONTROL RISER DIAGRAM
SCALE: N.T.S.

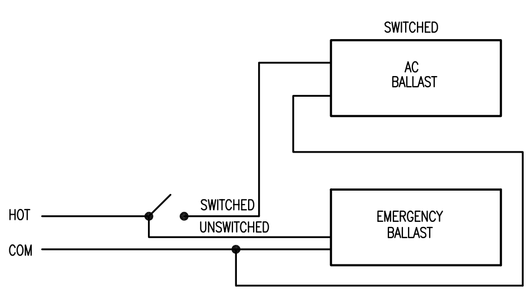

03 EMERGENCY BALLAST DETAIL
SCALE: N.T.S.

KEYED NOTES:

1. #18/2 TW/SHLD FPLP, 3/4"C, TYPICAL.
2. #14/2 TW/SHLD, 3/4"C, TYPICAL.
3. #18 SINGLE TWISTED SHIELDED PAIR FOR INITIATING DEVICES, #14 SINGLE TWISTED PAIR FOR STROBE DEVICES AND #14/2 FOR RELAY CIRCUITS, TYPICAL.
4. DDC PANEL PROVIDED BY DIVISION 15. PANEL TO MONITOR FIRE ALARM, TROUBLE AND SUPERVISORY SIGNALS. COORDINATE LOCATION OF CIRCUIT WITH MECHANICAL DIGITAL DIRECT CONTROL PANEL.

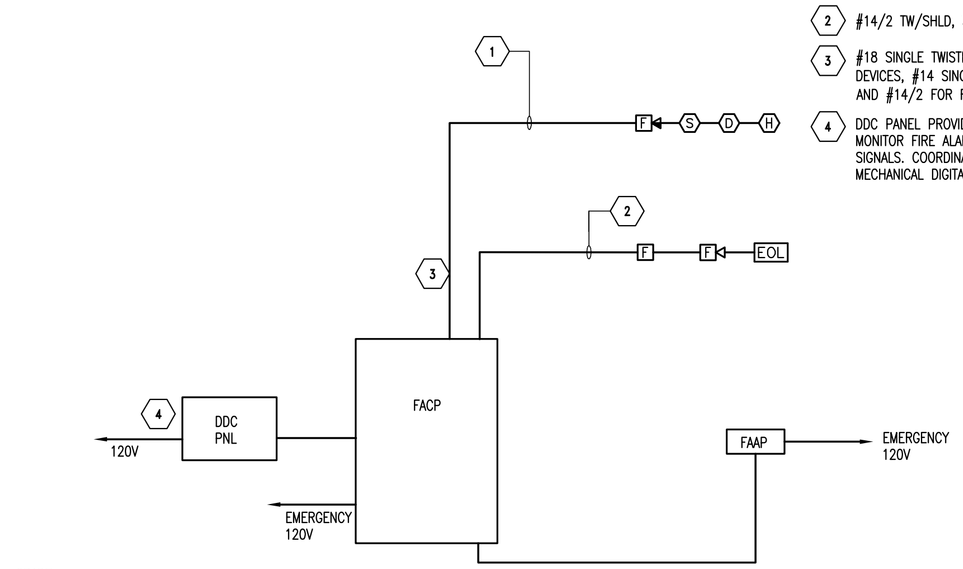

05 FIRE ALARM RISER DIAGRAM
SCALE:N.T.S.

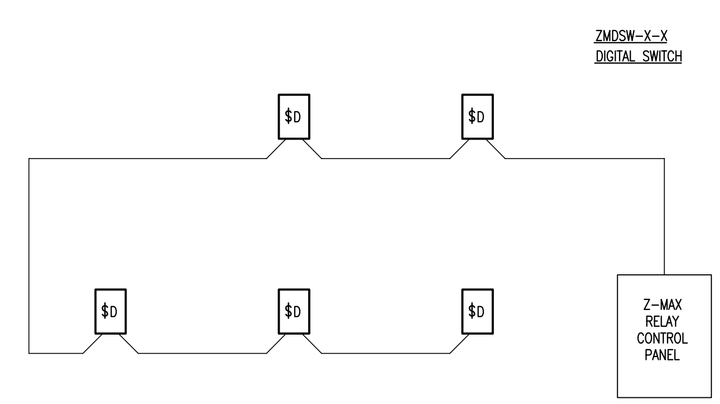

07 WIRING DETAIL – LIGHTING CONTROL W/DIGITAL SWITCH & RELAY CONTROL PANEL
SCALE: N.T.S.

HALFF
5000 WEST MILITARY, SUITE 100
McALLEN, TEXAS 78503
TEL (956) 664-0286
FAX (956) 664-0282
Halff Associates firm registration number is 312

100% PRICING SET

REVISIONS

The Reese
Phase I
202 S. 1st. Street
Harlingen, TX

ELECTRICAL DETAILS

MEGAMORPHOSIS
• ARCHITECTURE & INTERIOR DESIGN
1409 N. STUART PLACE RD., SUITE D
PHONE # (956) 428-1779 FAX # (956) 425-5886

PROJECT # 27074
MAR. 26, 2010
E-7.2

KEY NOTES:

1. ACTIVATION OF ONE PULL STATION SHALL INITIATE AGENT SPRAY OF ALL KITCHEN HOODS.

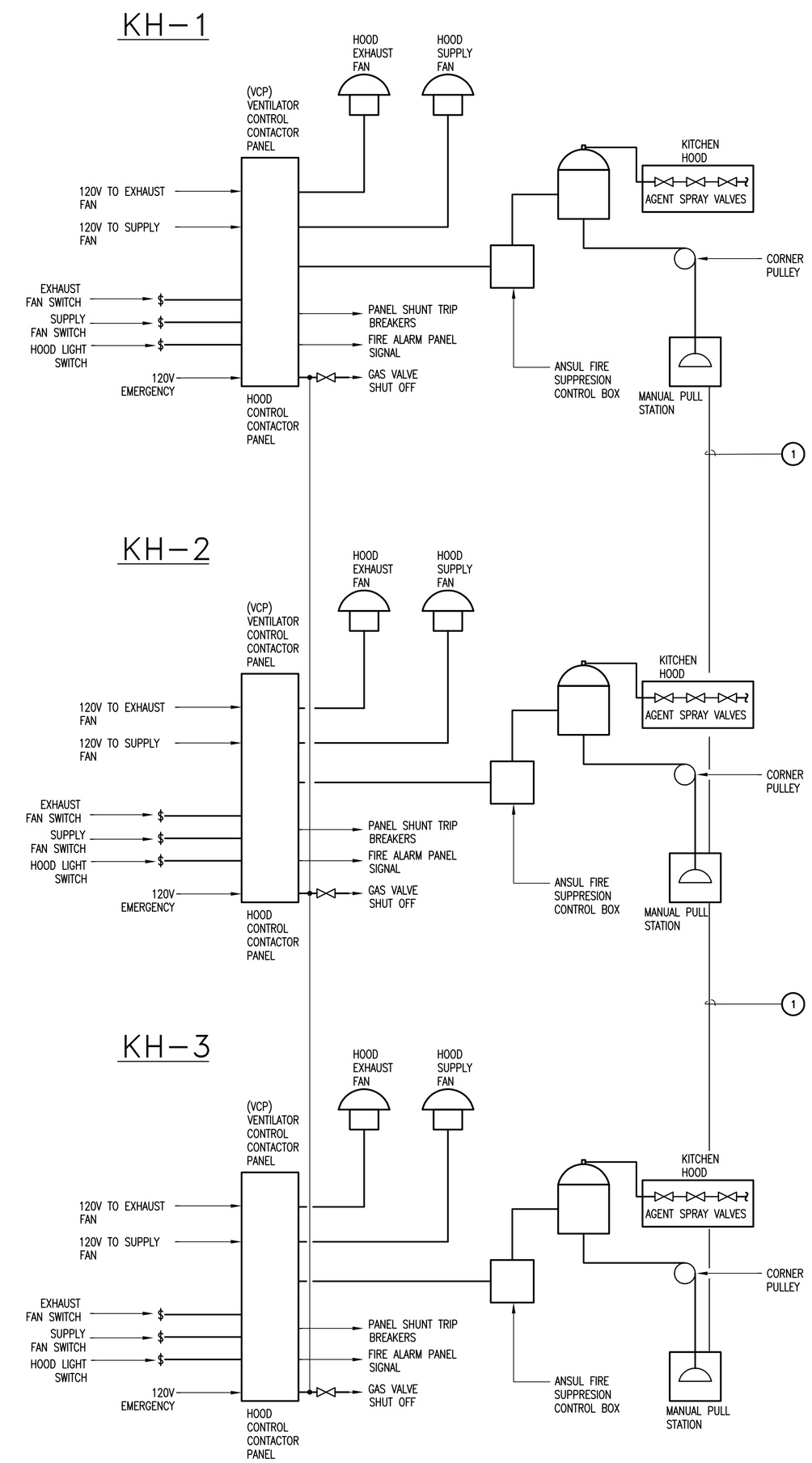

01 KITCHEN HOOD FIRE SUPPRESSION SYSTEM DETAIL
SCALE:N.T.S.

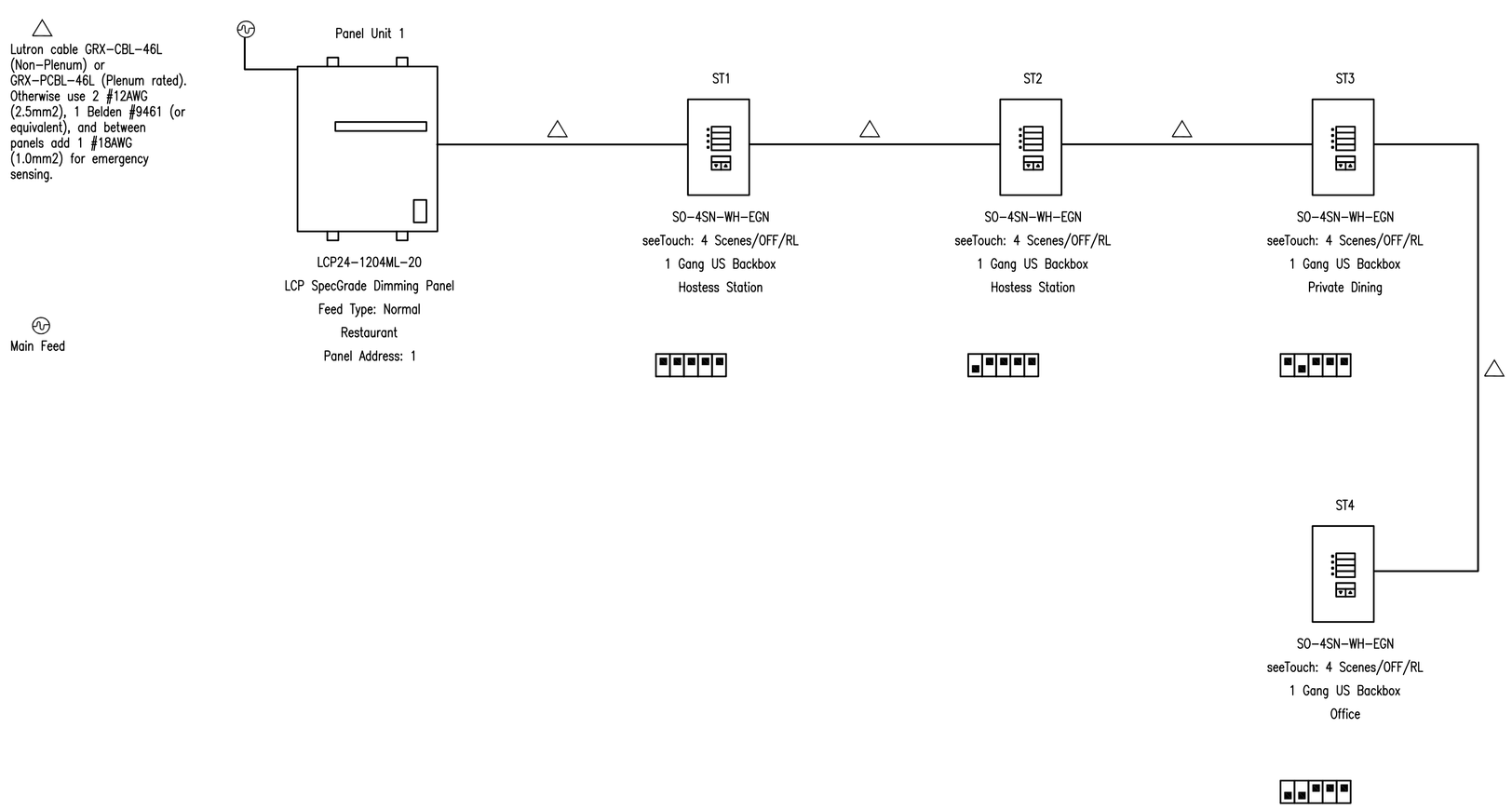

02 DIMMER ONE-LINE DIAGRAM
SCALE:N.T.S.

REVISIONS

The Reese
Phase I
202 S. 1st. Street
Harlingen, TX

ELECTRICAL DETAILS

MEGAMORPHOSIS
• ARCHITECTURE & INTERIOR DESIGN
1409 N. STUART PLACE RD., SUITE D
PHONE #(956) 428-1779 FAX # (956) 425-5868

HALFF
5000 WEST MILITARY, SUITE 100
McALLEN, TEXAS 78503
TEL (956) 664-0286
FAX (956) 664-0282
Halff Associates firm registration number is 312

100% PRICING SET

PROJECT # 27074
MAR. 26, 2010
E-7.3

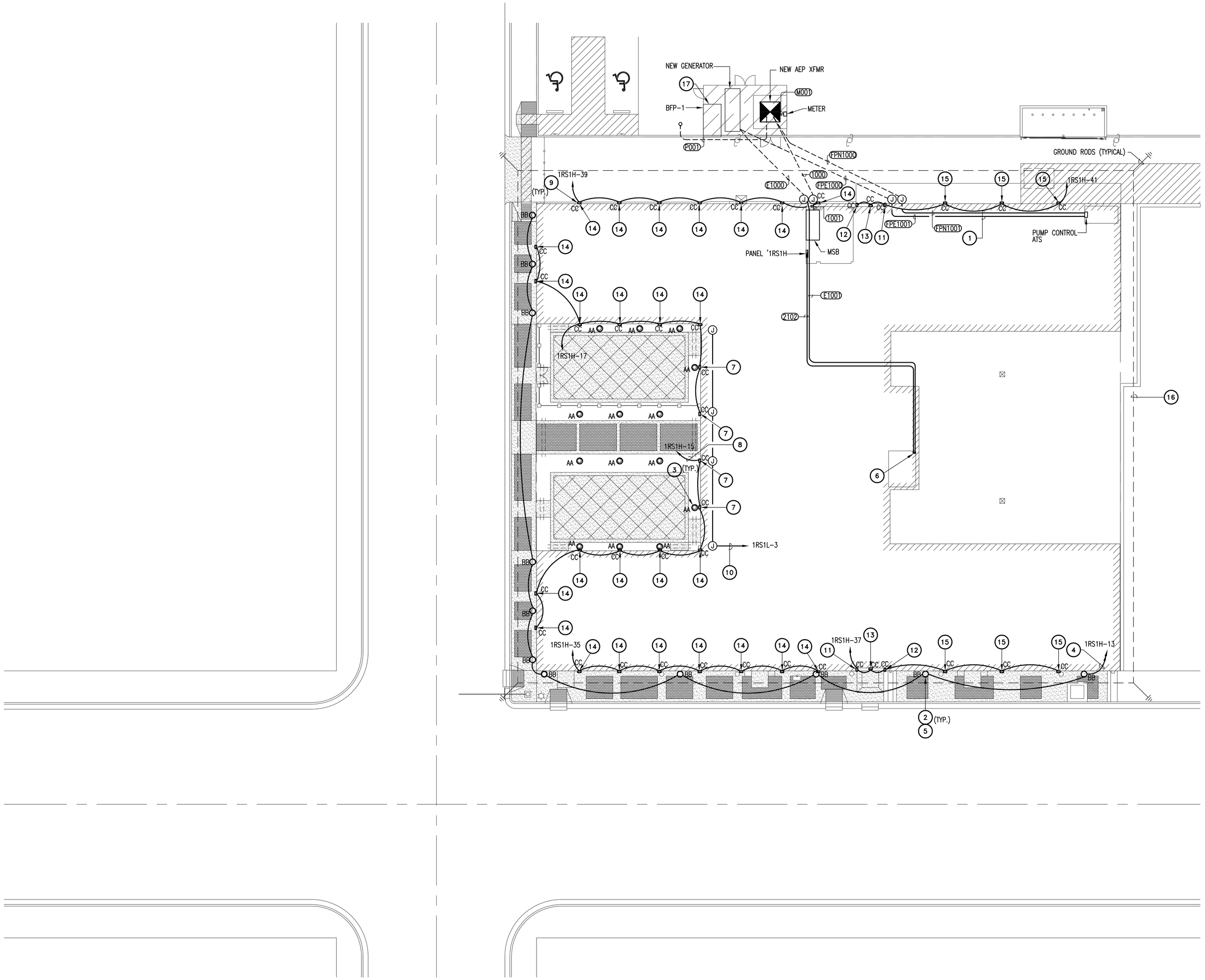

01 ELECTRICAL SITE PLAN

SCALE:1/16"=1'-0"

GENERAL NOTES:

(A) ELECTRICAL CONTRACTOR SHALL CONTACT UTILITY COMPANY SERVICE REPRESENTATIVE AND COORDINATE SERVICE INSTALLATION PRIOR TO COMMENCING WORK.

(B) ELECTRICAL CONTRACTOR SHALL INCLUDE IN HIS BID TO OWNER ALL FEES AND CONSTRUCTION COSTS CHARGED BY UTILITY COMPANY FOR MAIN LINE EXTENSIONS AND NEW SERVICE INSTALLATION.

(C) ELECTRICAL CONTRACTOR SHALL COORDINATE SERVICE ENTRANCE REQUIREMENTS FOR TELEPHONE WITH LOCAL TELEPHONE SERVICE COMPANY PRIOR TO COMMENCING WORK.

(D) ELECTRICAL CONTRACTOR SHALL PROVIDE FOUNDATIONS FOR ALL LIGHT POLES SHOWN ON DRAWINGS. REFER TO STRUCTURAL DRAWINGS FOR FOUNDATION DESIGN.

(E) ELECTRICAL CONTRACTOR SHALL INSTALL ALL UNDERGROUND CONDUIT, CONDUCTORS, AND CABLE AS SPECIFIED IN PROJECT MANUAL. RE: SECTION 16120, 16130 AND OTHER RELATED SECTIONS OF DIVISION 16.

(F) REFER TO LIGHTING CONTROL RELAY PANEL SCHEDULE, SHEET E-6.4, FOR CIRCUITING OF LIGHT SWITCHES AND LIGHT FIXTURES THROUGH RELAYS IN LIGHTING RELAY PANELS. RE:DETAIL 02/E-6.4.

KEY NOTES:

1. IN CRAWL SPACE.
2. RECESSED UP-LIGHT IN SIDEWALK.
3. GAS LANTERN TO BE FURNISHED WITH SHUT OFF VALVE TO IGNITE FLAME. NO ELECTRIC STRIKE REQUIRED.
4. ROUTE 2#10, 1#10G, 3/4"C.
5. SITE LIGHTS TO BE CONTROLLED VIA TIME CLOCK AND PHOTOCELL.
6. ROUTE FEEDERS TO ATS-1 LOCATED AT BASEMENT.
7. MOUNT FIXTURE AT 12-FEET AFF. REFER TO A-3.2 FOR ARCHITECTURAL ELEVATIONS.
8. ROUTE 2#10, 1#10G, 3/4"C.
9. SITE LIGHTS TO BE CONTROLLED VIA TIMECLOCK AND PHOTOCELL.
10. SOLENOID VALVES FOR AUTOMATIC SHUTOFF OF GAS TO LANTERNS TO BE PROVIDED BY DIVISION 15. PROVIDE 120V CIRCUIT FOR POWER.
11. FIXTURE TYPE CC, CONSISTS OF TWO LIGHT FIXTURES. ONE FIXTURE AT MOUNTING HEIGHT 15-FEET AFF AND ONE AT 36-FEET AFF. REFER TO A-3.1 FOR ARCHITECTURAL ELEVATIONS.
12. FIXTURE TYPE CC, CONSISTS OF TWO LIGHT FIXTURES. ONE FIXTURE AT MOUNTING HEIGHT 26-FEET AFF AND ONE AT 47-FEET AFF. REFER TO A-3.1 FOR ARCHITECTURAL ELEVATIONS.
13. MOUNT FIXTURE AT 10-FEET AFF. REFER TO A-3.1 FOR ARCHITECTURAL ELEVATIONS.
14. MOUNT FIXTURE AT 41'-8" AFF. REFER TO A-3.1, A-3.2 AND A-3.3 FOR ARCHITECTURAL ELEVATIONS.
15. MOUNT FIXTURE AT 32-FEET AFF. REFER TO A-3.1 FOR ARCHITECTURAL ELEVATIONS.
16. FURNISH AND INSTALL GROUND LOOP FOR LIGHTNING PROTECTION PER 13100.
17. COORDINATE ROUGH IN WITH FIRE SPRINKLER PIPING.

100% PRICING SET

HALFF
5000 WEST MILITARY, SUITE 100
McALLEN, TEXAS 78503
TEL (956) 664-0286
FAX (956) 664-0282
Halff Associates firm registration number is 312

REVISIONS

The Reese
Phase I
202 S. 1st. Street
Harlingen, TX

ELECTRICAL SITE PLAN

MEGAMORPHOSIS
- ARCHITECTURE & INTERIOR DESIGN
1409 N. STUART PLACE RD., SUITE D
PHONE # (956) 428-1779 FAX # (956) 425-5885

PROJECT # 27074

MAR. 26, 2010

ES-1.0

GENERAL NOTES:

A. FOR A LIST OF GENERAL PLUMBING NOTES; REFER TO PLUMBING SCHEDULES AND NOTES DRAWING, SHEET P-4.2

KEY NOTES:

1. ROUTE DISCHARGE PIPING FROM LIFT STATION UP TO SANITARY SEWER LINE ABOVE. REFER TO P-1.1 FOR POINT OF CONNECTION.

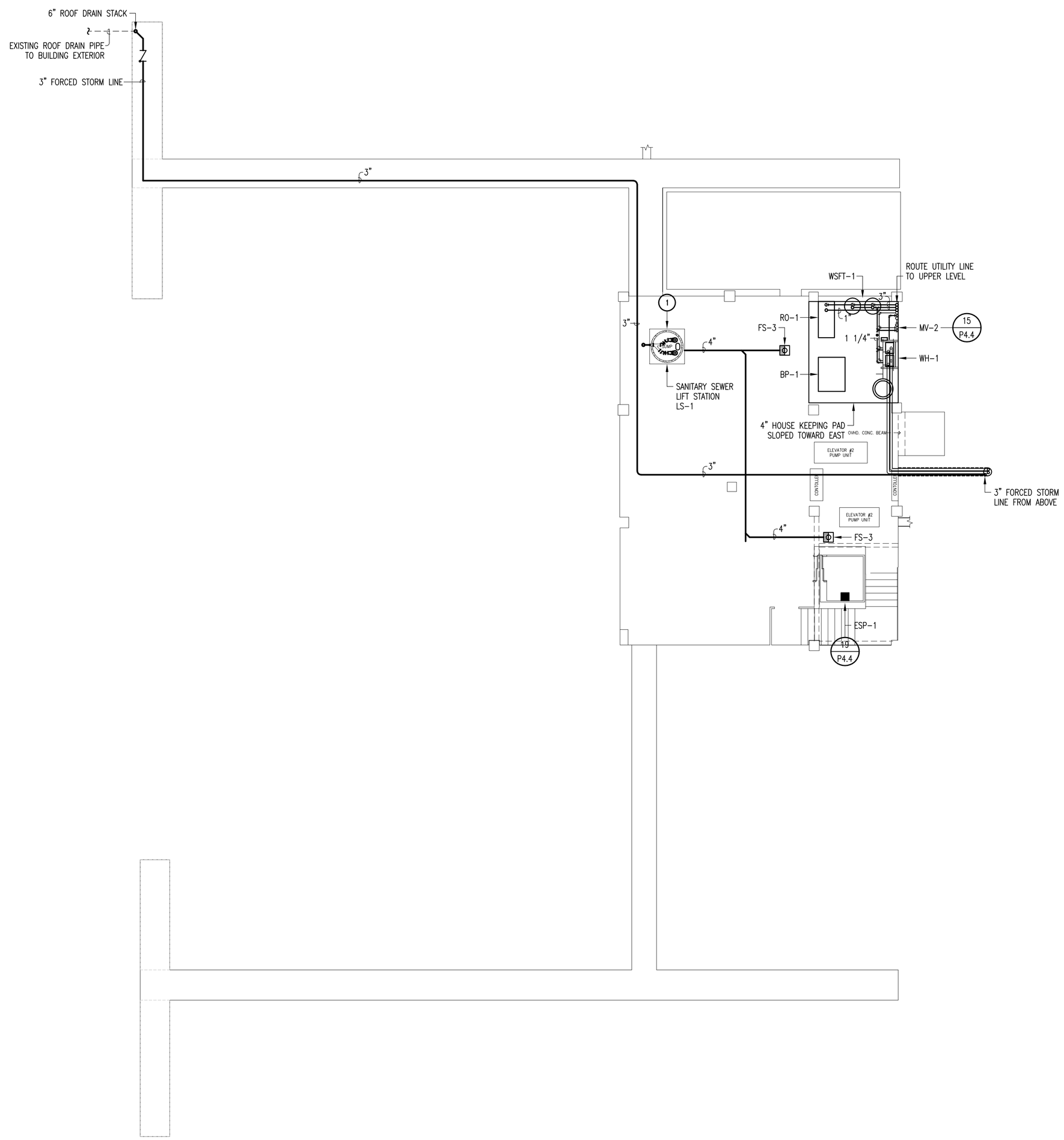

01 BASEMENT – PLUMBING PLAN

SCALE: 1/8" = 1'-0"

100% PRICING SET

HALFF
5000 WEST MILITARY, SUITE 100
McALLEN, TEXAS 78503
TEL (956) 664-0286
FAX (956) 664-0282
Halff Associates firm registration number is 312

REVISIONS

The Reese
Phase I
202 S. 1st. Street
Harlingen, TX

BASEMENT
PLUMBING PLAN

MEGAMORPHOSIS
- ARCHITECTURE & INTERIOR DESIGN
1409 N. STUART PLACE RD., SUITE D
PHONE #(956) 428-1779 FAX # (956) 425-5886

PROJECT # 27074

MAR. 26, 2010

P-1.0

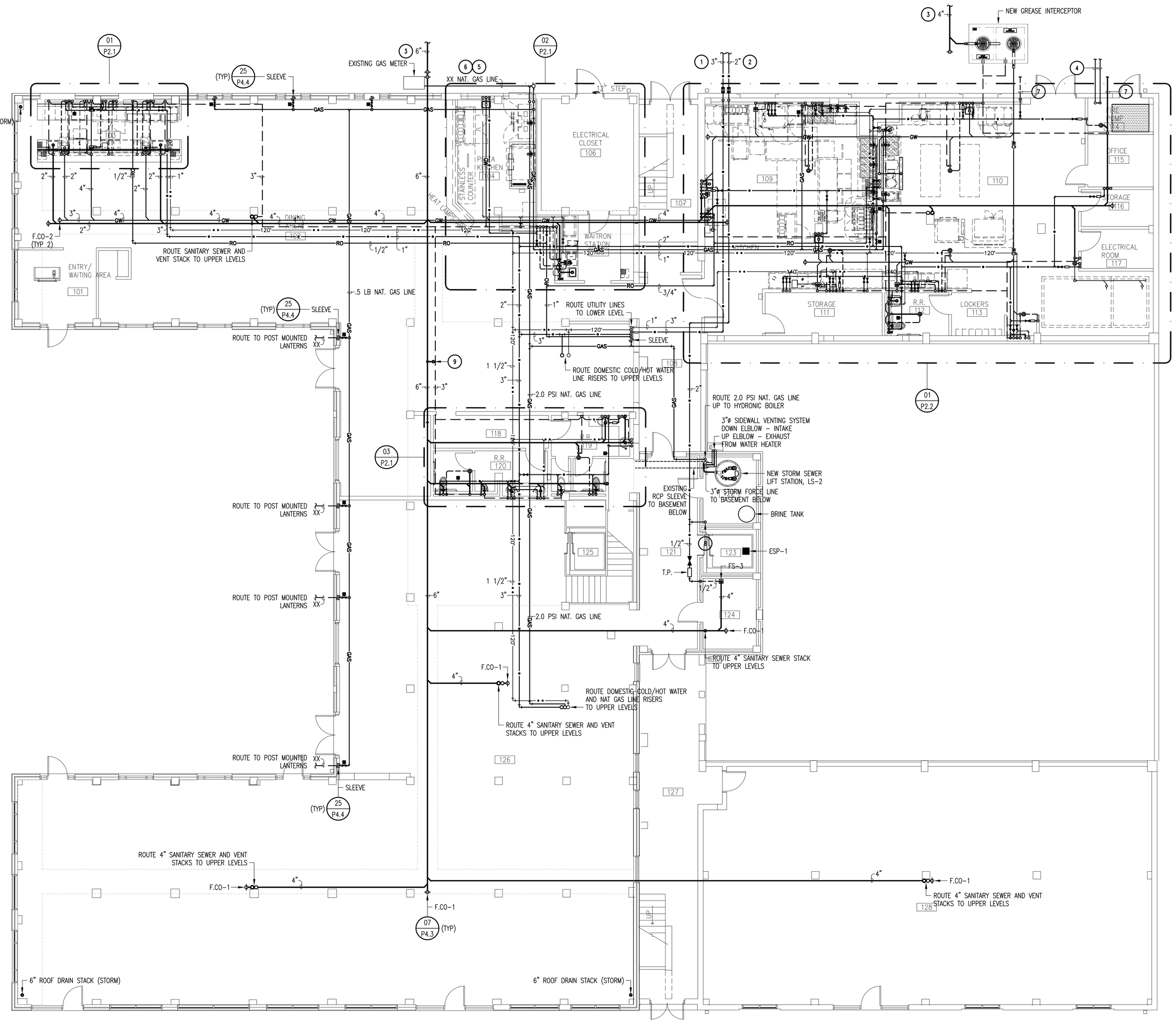

01 FIRST FLOOR – PLUMBING PLAN

SCALE: 1/8" = 1'-0"

GENERAL NOTES:

A. FOR A LIST OF GENERAL PLUMBING NOTES; REFER TO PLUMBING SCHEDULES AND NOTES DRAWING, SHEET P-4.2

KEY NOTES:

1. NEW 3" DOMESTIC WATER LINE. PLUMBING CONTRACTOR SHALL VERIFY EXISTING WATER PRESSURE AND LOCATIONS PRIOR TO CONNECTION, AND GENERAL CONTRACTOR SHALL CONTACT CITY WATER DEPARTMENT PRIOR TO TAP.
2. NEW 2" IRRIGATION WATER LINE. PLUMBING CONTRACTOR SHALL VERIFY EXISTING WATER PRESSURE AND LOCATIONS PRIOR TO CONNECTION, AND GENERAL CONTRACTOR SHALL CONTACT CITY WATER DEPARTMENT PRIOR TO TAP.
3. NEW 4" AND 6" SANITARY SEWER LINES. PLUMBING CONTRACTOR SHALL VERIFY EXISTING SANITARY SEWER LOCATION, INVERT SLOPE, ELEVATION AND DIRECTION OF FLOW PRIOR TO INSTALLING SANITARY SEWER LINES, AND GENERAL CONTACTOR SHALL CONTACT CITY WASTE WATER DEPARTMENT PRIOR TO TAP.
4. PROPOSED FIRE SPRINKLER SERVICE LINE LOCATIONS. LINES SIZES AND OTHER DESIGN REQUIREMENTS SHALL BE DETERMINED BY A LICENSED FIRE PROTECTION SPECIALIST.
5. NEW XX NATURAL GAS LINE. PLUMBING CONTRACTOR SHALL VERIFY EXISTING GAS PRESSURE PRIOR TO CONNECTION, AND GENERAL CONTRACTOR SHALL CONTACT CITY GAS DEPARTMENT PRIOR TO TAP. ALL UNDERGROUND NATURAL GAS PIPE SHALL BE POLYETHYLENE TYPE, TRANSITION TO SCHEDULE 40 BLACK AT RISER. REFER TO DETAIL 22/P4.4
6. NATURAL GAS ESTIMATED DEMAND XX AT BUILDING. REFER TO GAS RISER DIAGRAM 02/P3.2
7. ROUTE 4" SANITARY SEWER AND 1/2" WATER LINES TO DUMPSTER.
8. LOCATE BOOSTER PUMP (BP-2) ON RISER; CONTINUE 2" MAKE-UP WATER LINE UP TO COOLING TOWER.
9. 2" SANITARY SEWER FROM LIFT STATION LS-1 AT BASEMENT.

HALFF
5000 WEST MILITARY, SUITE 100
McALLEN, TEXAS 78503
TEL (956) 664-0286
FAX (956) 664-0282
Halff Associates firm registration number is 312

100% PRICING SET

REVISIONS

The Reese
Phase I
202 S. 1st. Street
Harlingen, TX

FIRST FLOOR
PLUMBING PLAN

MEGAMORPHOSIS
• ARCHITECTURE & INTERIOR DESIGN
1409 N. STUART PLACE RD., SUITE D
PHONE #(956) 428-1779 FAX # (956) 425-5886

PROJECT # 27074

MAR. 26, 2010

P-1.1

GENERAL NOTES:

A. FOR A LIST OF GENERAL PLUMBING NOTES; REFER TO PLUMBING SCHEDULES AND NOTES DRAWING, SHEET P-4.2

KEY NOTES:

1. ROUTE CONDENSATE DRAIN LINES, FROM A/C EQUIPMENT, AND EXTEND INDIRECT WASTE LINE AND DROP INTO FLOOR SINK.

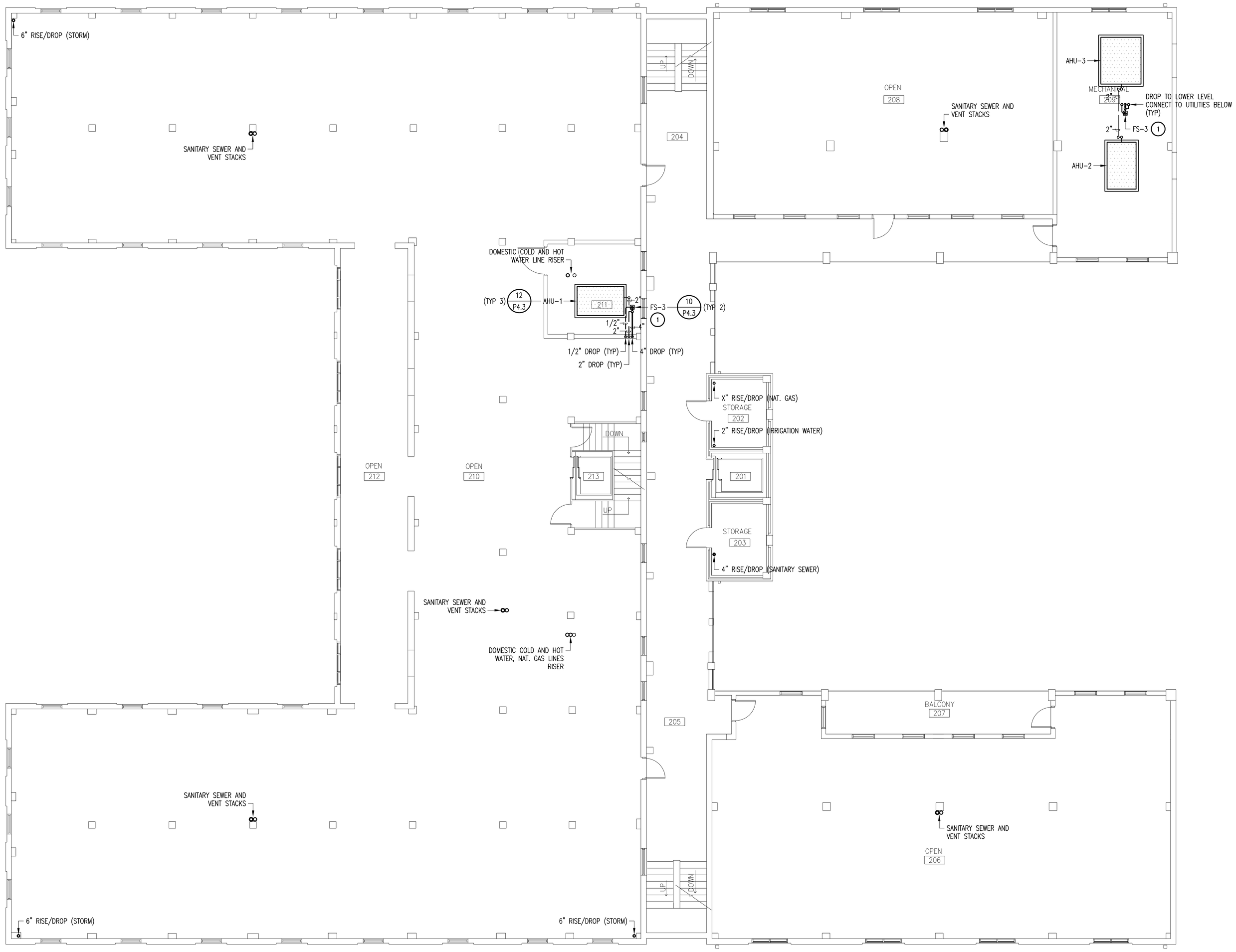

01 SECOND FLOOR – PLUMBING PLAN

SCALE: 1/8" = 1'-0"

N

100% PRICING SET

HALFF
5000 WEST MILITARY, SUITE 100
McALLEN, TEXAS 78503
TEL (956) 664-0286
FAX (956) 664-0282
Halff Associates firm registration number is 312

REVISIONS

The Reese
Phase I
202 S. 1st. Street
Harlingen, TX

SECOND FLOOR
PLUMBING PLAN

MEGAMORPHOSIS
- ARCHITECTURE & INTERIOR DESIGN
1409 N. STUART PLACE RD., SUITE D
PHONE #(956) 428-1779 FAX # (956) 425-5886

PROJECT # 27074

MAR. 26, 2010

P-1.2

GENERAL NOTES:

A. FOR A LIST OF GENERAL PLUMBING NOTES; REFER TO PLUMBING SCHEDULES AND AND NOTES DRAWING, SHEET P-4.2

KEY NOTES:

1. LOCATE REDUCED PRESSURE PRINCIPLE BACKFLOW PREVENTOR IN THE RISER AT PENTHOUSE LEVEL. REFER TO DETAIL 17/P4.3

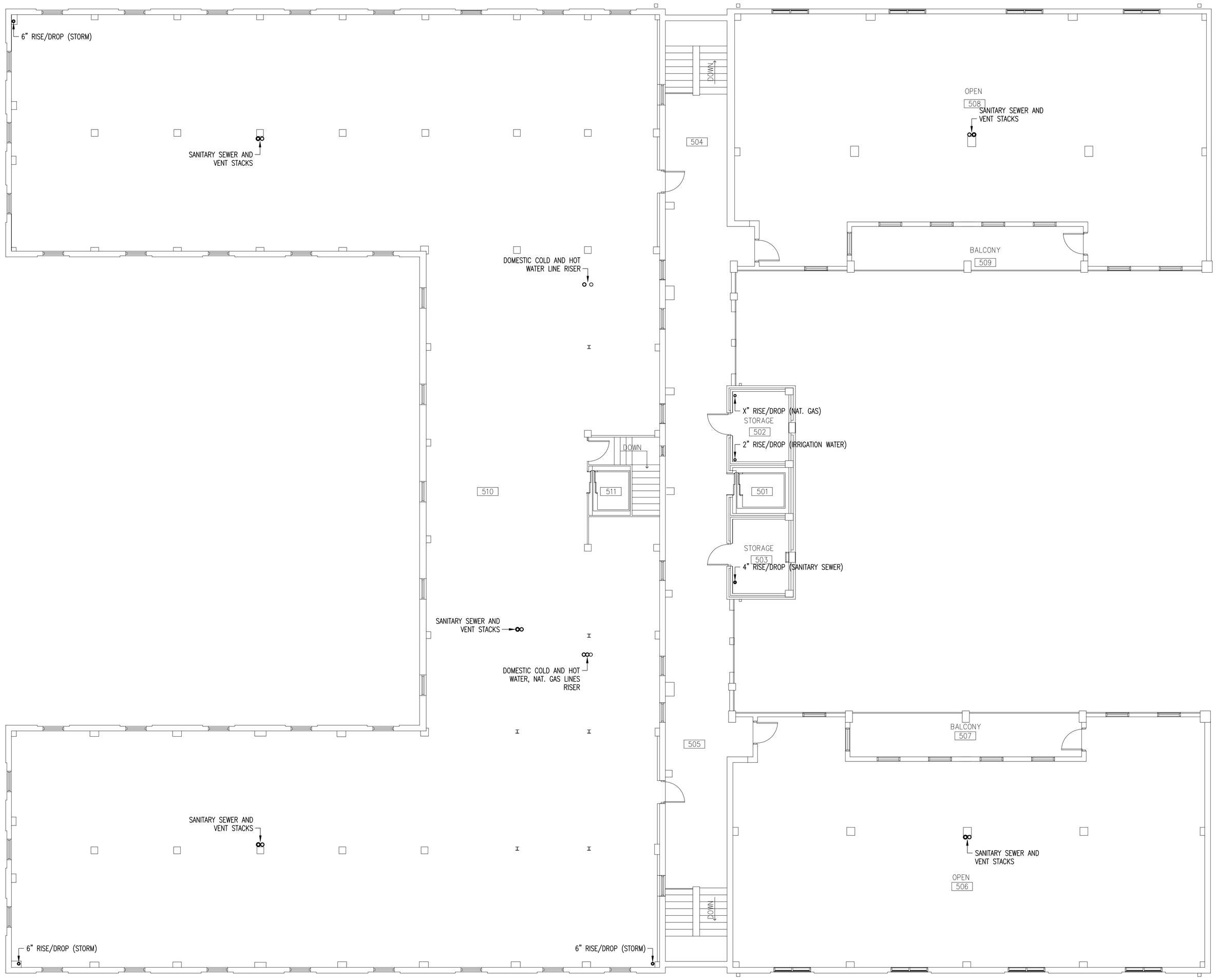

THIRD THRU
FIFTH FLOOR – PLUMBING PLAN
01
SCALE: 1/8" = 1'-0"

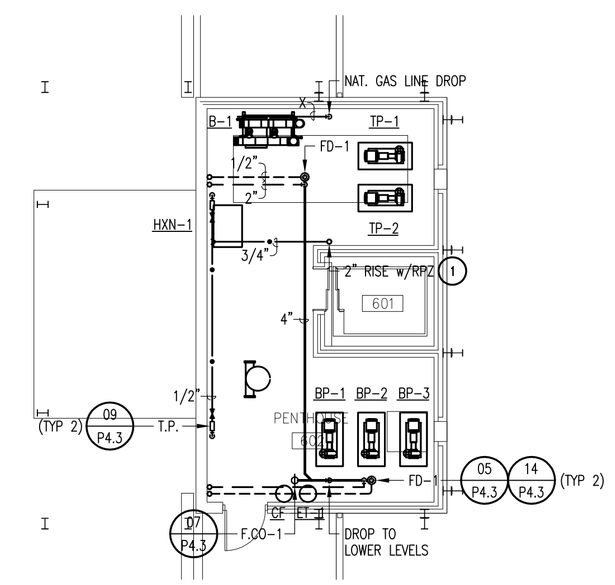

PENTHOUSE
PLUMBING PLAN
02
SCALE: 1/8" = 1'-0"

HALFF
5000 WEST MILITARY, SUITE 100
McALLEN, TEXAS 78503
TEL (956) 664-0286
FAX (956) 664-0282
Halff Associates firm registration number is 312

100% PRICING SET

REVISIONS

The Reese
Phase I
202 S. 1st. Street
Harlingen, TX

THIRD - FIFTH FLOOR
PLUMBING PLAN

MEGAMORPHOSIS
• ARCHITECTURE & INTERIOR DESIGN
1409 N. STUART PLACE RD., SUITE D
PHONE #(956) 423-1779 FAX # (956) 425-5886

PROJECT # 27074
MAR. 26, 2010
P-1.3

GENERAL NOTES:

A. FOR A LIST OF GENERAL PLUMBING NOTES; REFER TO PLUMBING SCHEDULES AND NOTES DRAWING, SHEET P-4.2

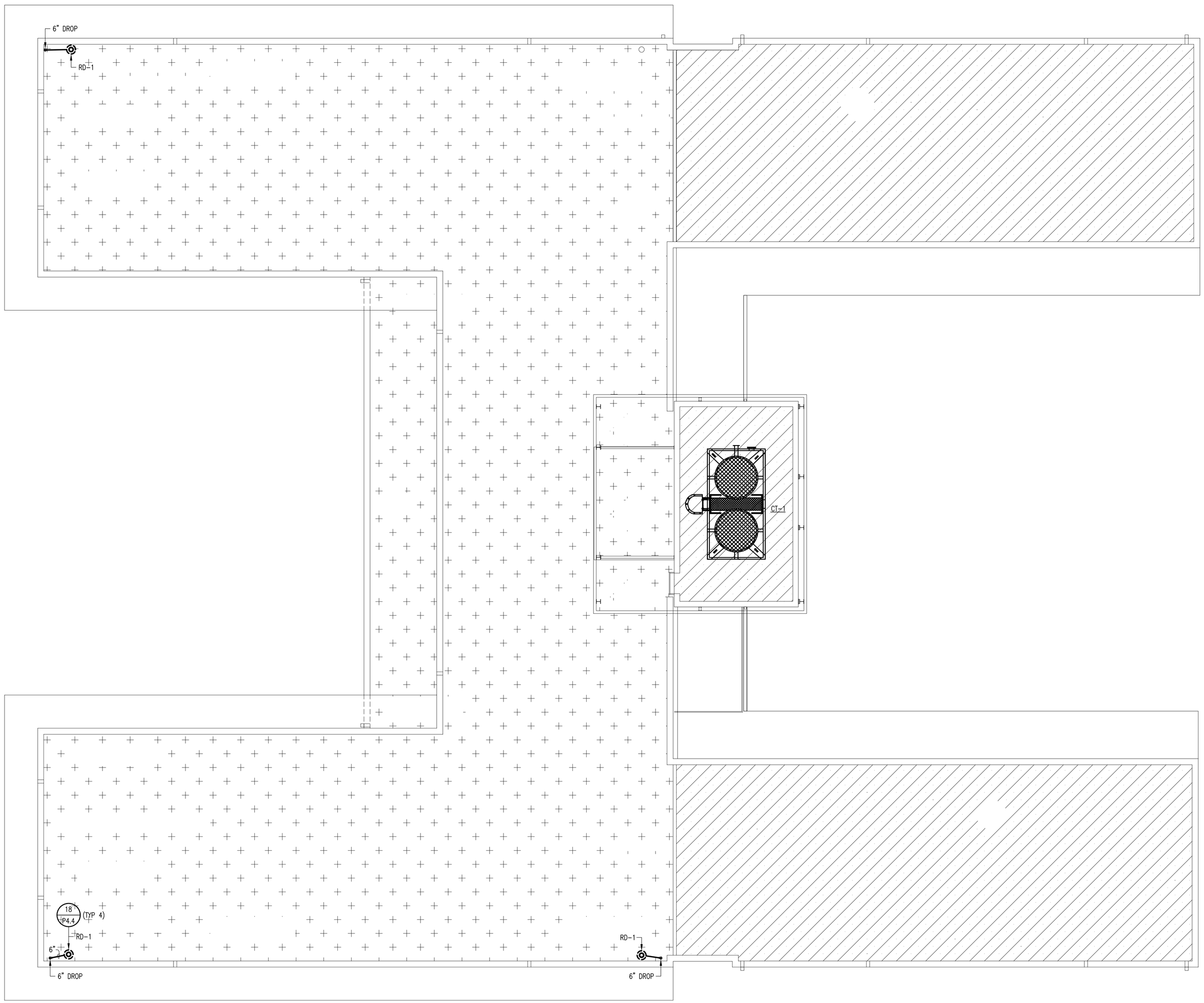

01 ROOF – PLUMBING PLAN
SCALE: 1/8" = 1'-0"

N

100% PRICING SET

HALFF
5000 WEST MILITARY, SUITE 100
McALLEN, TEXAS 78503
TEL (956) 664-0286
FAX (956) 664-0282
Halff Associates firm registration number Is 312

REVISIONS

The Reese
Phase I
202 S. 1st. Street
Harlingen, TX

ROOF
PLUMBING PLAN

MEGAMORPHOSIS
- ARCHITECTURE & INTERIOR DESIGN
1409 N. STUART PLACE RD., SUITE D
PHONE #(956) 428-1779 FAX # (956) 425-5866

PROJECT # 27074

MAR. 26, 2010

P-1.4

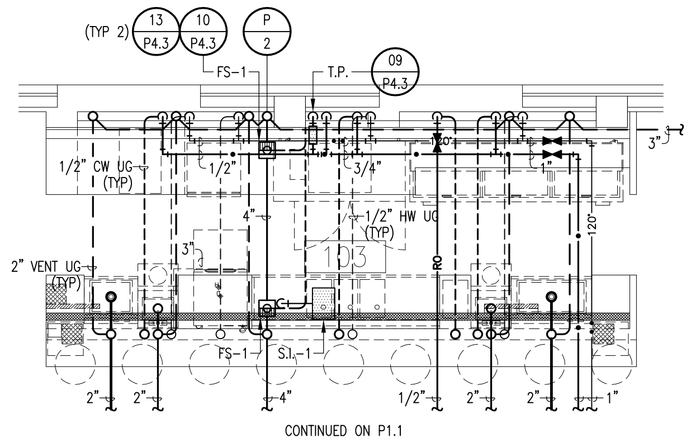

01 ENLARGED PLUMBING PLAN
SCALE: 1/4" = 1'-0"

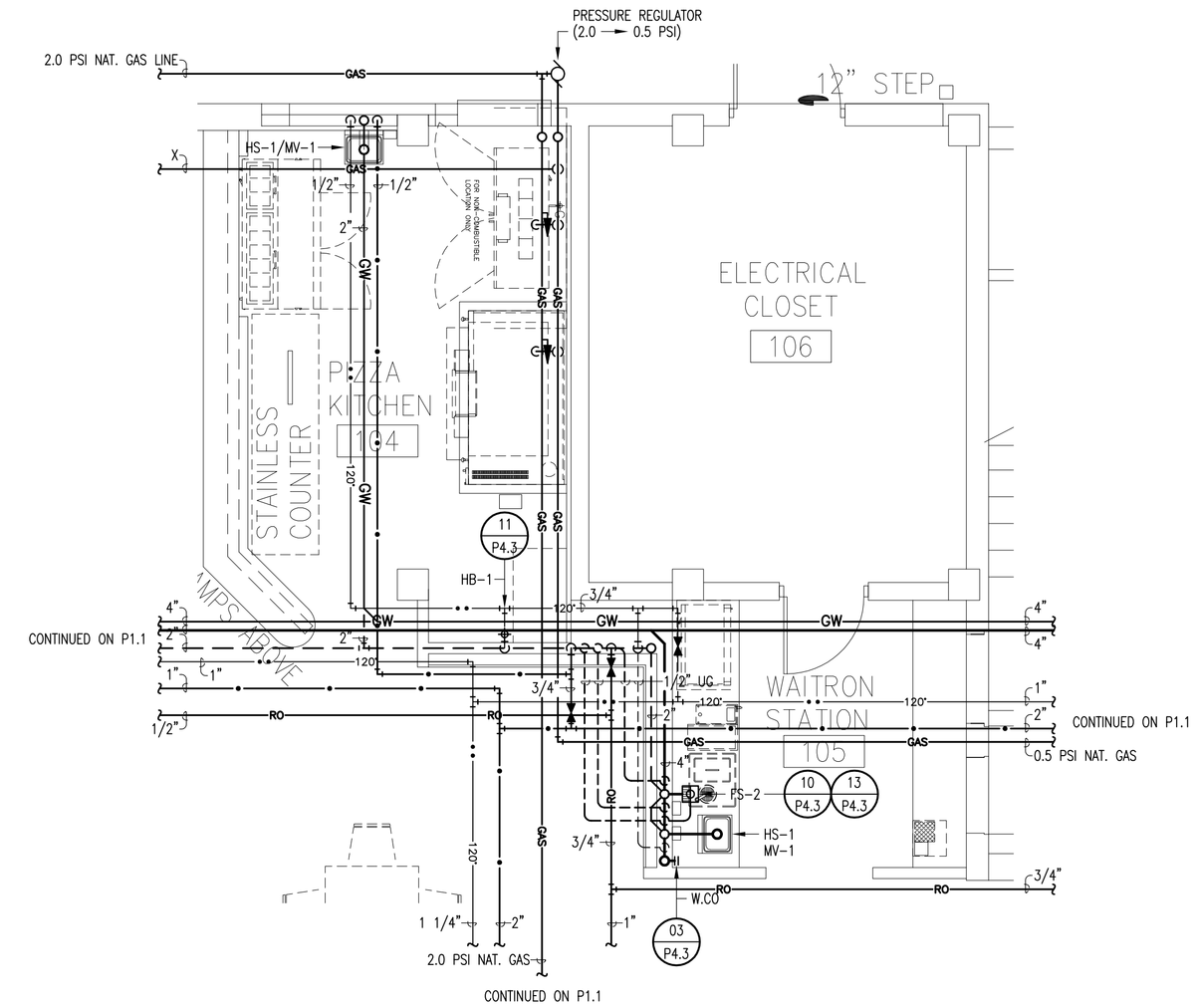

02 ENLARGED PLUMBING PLAN
SCALE: 1/4" = 1'-0"

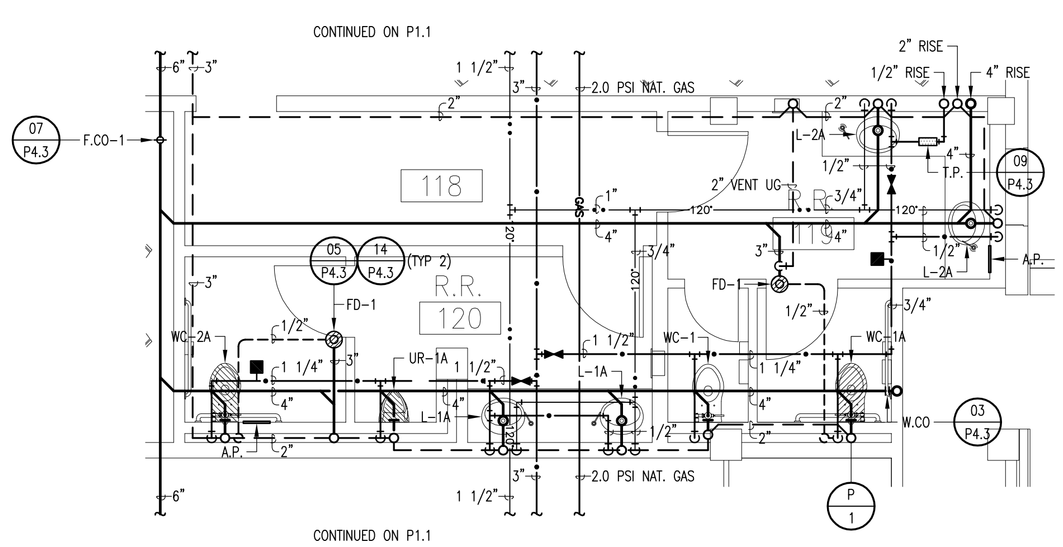

03 ENLARGED PLUMBING PLAN
SCALE: 1/4" = 1'-0"

REVISIONS

The Reese
Phase I
202 S. 1st. Street
Harlingen, TX

FIRST FLOOR
PLUMB. ENLARGED PLAN

MEGAMORPHOSIS
• ARCHITECTURE & INTERIOR DESIGN
1409 N. STUART PLACE RD., SUITE D
PHONE #(956) 428-1779 FAX # (956) 425-5888

PROJECT # 27074
MAR. 26, 2010
P-2.1

100% PRICING SET

HALFF
5000 WEST MILITARY, SUITE 100
McALLEN, TEXAS 78503
TEL (956) 664-0286
FAX (956) 664-0282
Halff Associates firm registration number is 312

PLUMBING NOTES

ALL PLUMBING OUTLETS AND REQUIREMENTS SHOWN ON THIS PLAN ARE FOR FIXTURES AND EQUIPMENT SPECIFIED AS FURNISHED BY KITCHEN EQUIPMENT SUPPLIER. FOR ANY ADDITIONAL BUILDING PLUMBING REQUIREMENTS, SEE OTHER MECHANICAL PLANS.

ALL DIMENSIONS GIVEN ARE FROM COLUMN CENTERLINES AND/OR FINISHED WALLS AND ARE IN INCHES TO 4'-0". ELEVATIONS GIVEN ARE FROM FINISHED FLOOR. ALL FLOOR DRAINS TO SET 1/2" BELOW FINISHED FLOOR UNLESS OTHERWISE NOTED. DO NOT SLOPE FLOORS SO CLOSE TO DRAINS AS TO CREATE "PITS" OR "DIPS" IN FLOOR. MINIMUM RADIUS OF SLOPE TO BE 24" FROM CENTERLINE OF DRAIN.

PLUMBER TO CONNECT ALL WATER LINES, WASTE LINES, ETC., TO FULLY CONNECT ALL EQUIPMENT AND RUN CONDENSATE LINES FROM UNITS TO DRAINS AND THESE LINES TO BE NO SMALLER THAN THE STUB OUT OF THE FIXTURE. PLUMBER TO PROVIDE GATE VALVES ON ALL WATER AND, VALVES, CUT-OFFS, TRAPS, HYDROSTATIC SHOCK ELIMINATORS, PRESSURE REGULATORS AND MATERIAL NECESSARY TO CONNECT ALL LINES, UNLESS OTHERWISE SPECIFIED IN THE ITEM SPECIFICATIONS. FAUCETS, DRAIN OUTLET FITTINGS IN FIXTURES AND SPECIALITY ITEMS ARE TO BE FURNISHED BY KITCHEN EQUIPMENT SUPPLIER AS OUTLINED ON THE ITEM SPECIFICATIONS. ALL WORK TO BE PERFORMED IN FULL ACCORDANCE WITH ALL APPLICABLE CODES RELATING TO INSTALLATION AND HOOK-UP OF EQUIPMENT.

LEGEND

- SANITARY SEWER LINE
- DOMESTIC COLD WATER LINE
- DOMESTIC HOT WATER LINE
- GW — GREASE WASTE LINE

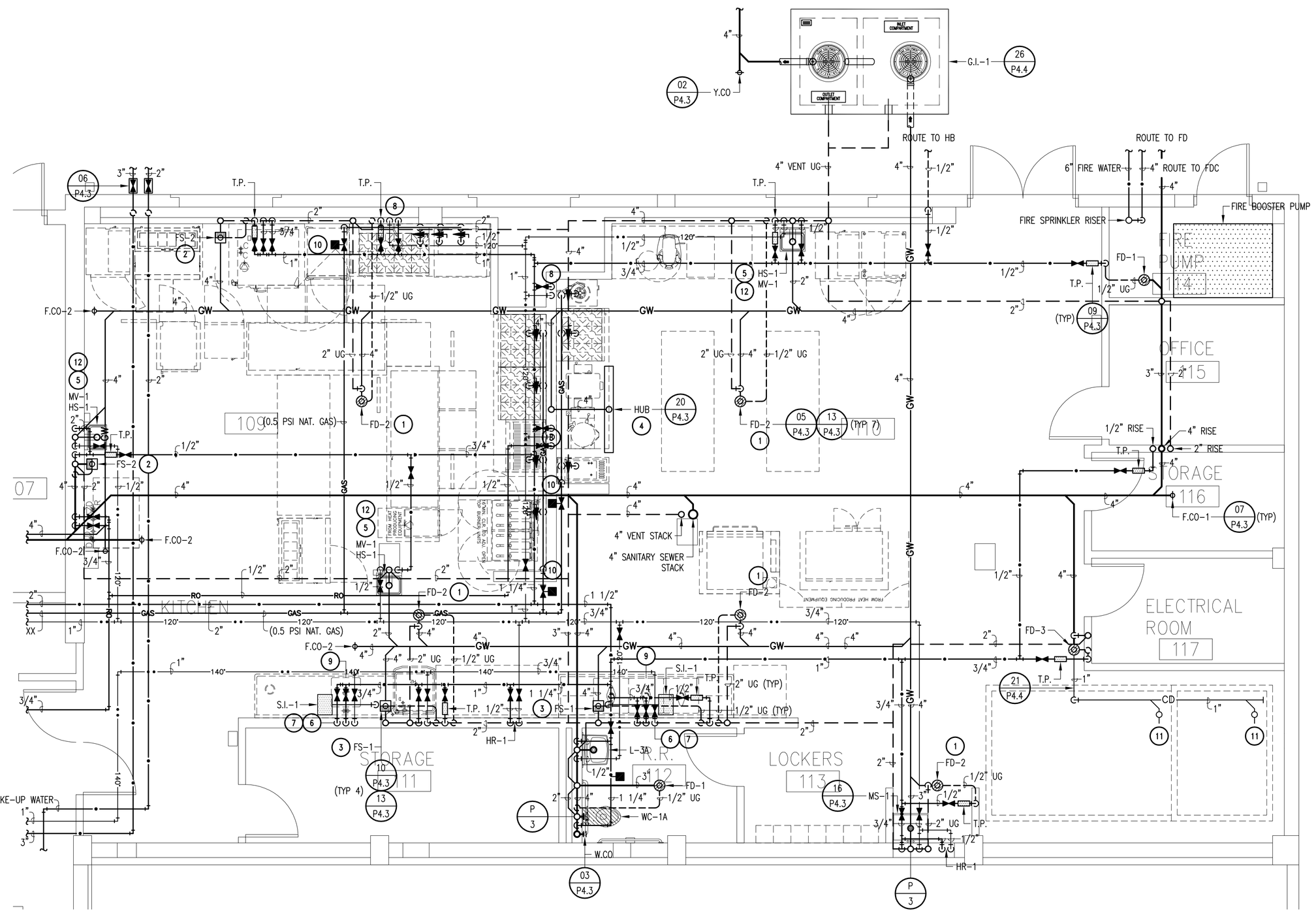

01 ENLARGED PLUMBING PLAN
SCALE: 1/4" = 1'-0"

GENERAL NOTES:

A. FOR A LIST OF GENERAL PLUMBING NOTES; REFER TO PLUMBING SCHEDULES AND NOTES DRAWING, SHEET P-4.2

KEY NOTES:

1. 4" FLOOR DRAIN, SET 1/2" B.F.F., SEE DETAIL 14, TYPE (FD-2) WITH 1/2" TRAP PRIMER AS REQUIRED.
2. 4" FLOOR SINK, 8"x8" WITH 3/4" STAINLESS STEEL GRATE, SET FLUSH WITH FINISHED FLOOR, SEE DETAIL 10, TYPE (FS-2) WITH 1/2" TRAP PRIMER AS REQUIRED.
3. 4" FLOOR SINK, 12"x12" WITH 1/2" STAINLESS STEEL GRATE, SET FLUSH WITH FINISHED FLOOR, SEE DETAIL 10, TYPE (FS-1) WITH 1/2" TRAP PRIMER AS REQUIRED.
4. 4" HUB DRAIN, SET 6" B.F.F., IN TRENCH DRAIN, SEE DETAIL 20.
5. 1/2" C.W./H.W., EL. 16" B.T.C. ON HAND SINK FAUCET.
6. 1/2" C.W./H.W., EL. 16", B.T.C. ON SINK FAUCETS.
7. 1/2" H.W., EL. 16", B.T.C. ON PRE RINSE SPRAY AND FAUCET ASSEMBLY. PROVIDE FAUCET WITH INTERNAL CHECKS.
8. 3/4" C.W./H.W., ON KETTLE FILLER, TILT FRYERS AND TROUGH COLLECTOR.
9. 2" DRAIN CONNECTION, EL 12", B.T.C. ON SINK DRAINS. PLUMBER TO PROVIDE MANIFOLD ON SINKS, AND BRANCH ALL INDIRECT DRAIN LINES FROM EQUIPMENT TO NEAREST FLOOR SINK, SEE DETAIL 13.
10. PLUMBING CONTRACTOR TO SET SOLENOID VALVE, FURNISHED BY KITCHEN EQUIPMENT SUPPLIER, IN LINE, AS PART OF THE FIRE EXTINGUISHING SYSTEM.
11. PLUMBING CONTRACTOR IS TO INSTALL 1" INSULATED COPPER CONDENSATE DRAIN LINES COMPLETE WITH P-TRAPS AND HEAT TAPE WRAP. CONDENSATE DRAIN LINES FOR BOTH THE COOLER AND FREEZER ARE TO BE INSULATED, SEE DETAIL 21.
12. PROVIDE SINGLE OUTLET THERMOSTATIC WATER MIXING VALVE, TYPE (MV-1), FOR HAND SINKS AND LAVATORY.
13. 3" DRAIN, S.U. 1" B.T.C. ON TROUGH COLLECTOR SYSTEM.
14. 3/4" H.W. 180°F WATER MINIMUM 5'-6" A.F.F., B.T.C. ON DISHWASHER (250 GPH AT 20.0 P.S.I.), SEE DETAIL 23.
15. NATURAL GAS, LOOPED D.F.A. 1,431,000 BTU/HR, REFER TO GAS RISER DIAGRAM SHEET P-3.2

100% PRICING SET

HALFF
5000 WEST MILITARY, SUITE 100
McALLEN, TEXAS 78503
TEL (956) 664-0286
FAX (956) 664-0282
Halff Associates firm registration number is 312

REVISIONS

The Reese
Phase I
202 S. 1st. Street
Harlingen, TX

FIRST FLOOR
PLUMB. ENLARGED PLAN

MEGAMORPHOSIS
ARCHITECTURE & INTERIOR DESIGN
1409 N. STUART PLACE RD., SUITE D
PHONE #(956) 428-1779 FAX #(956) 425-5886

PROJECT # 27074
MAR. 26, 2010
P-2.2

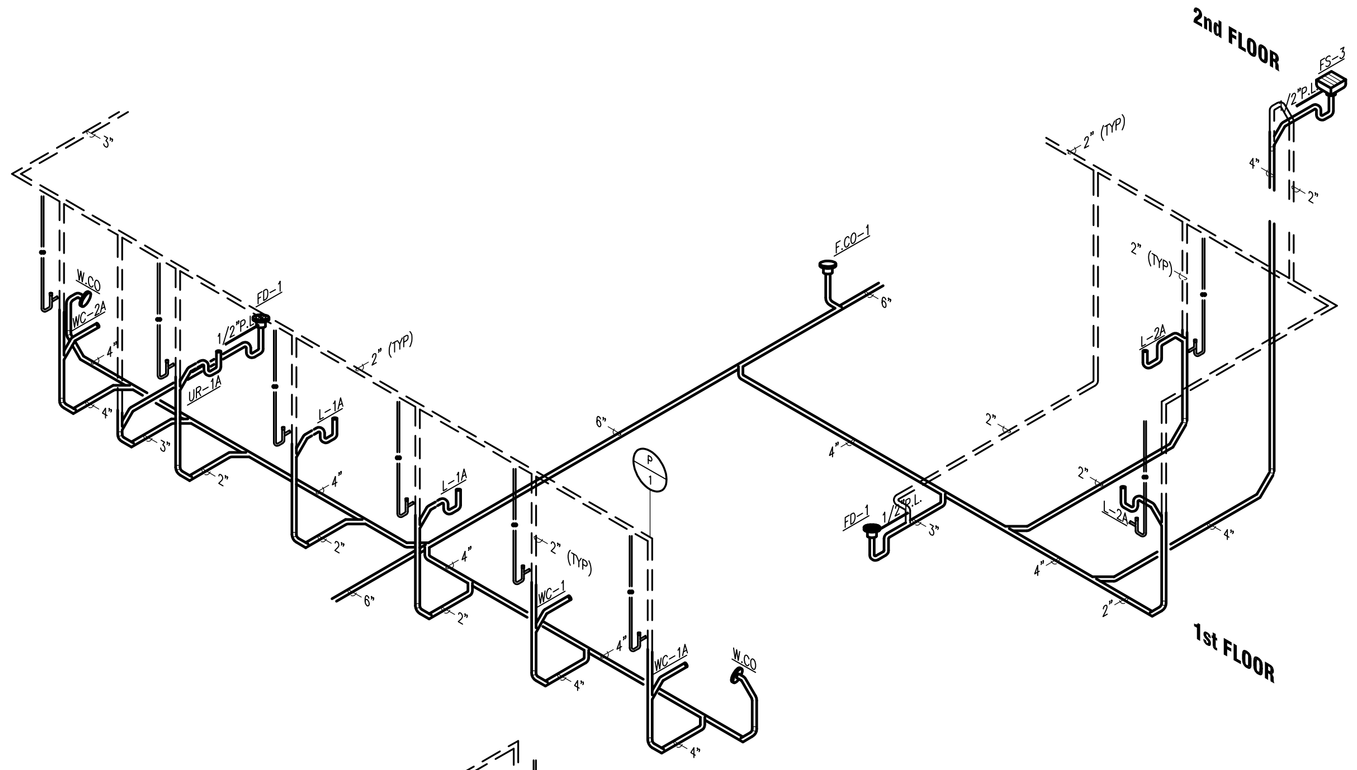

PLUMBING RISER
01 SCHEMATIC DIAGRAM
SCALE: NTS

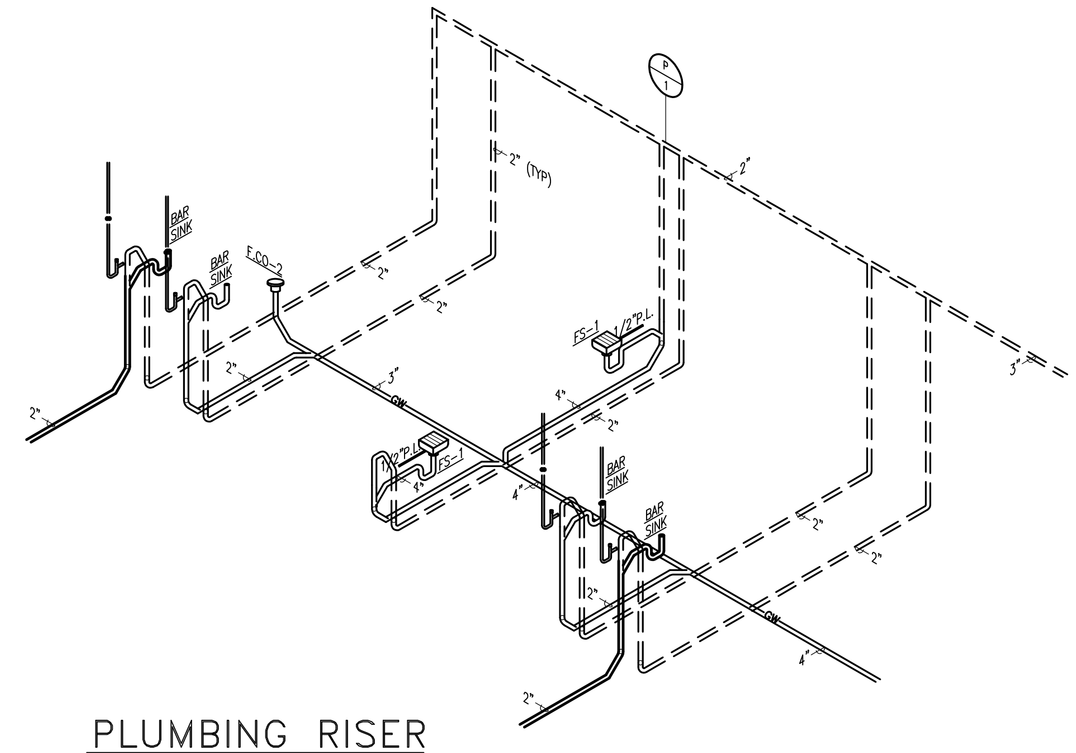

PLUMBING RISER
02 SCHEMATIC DIAGRAM
SCALE: NTS

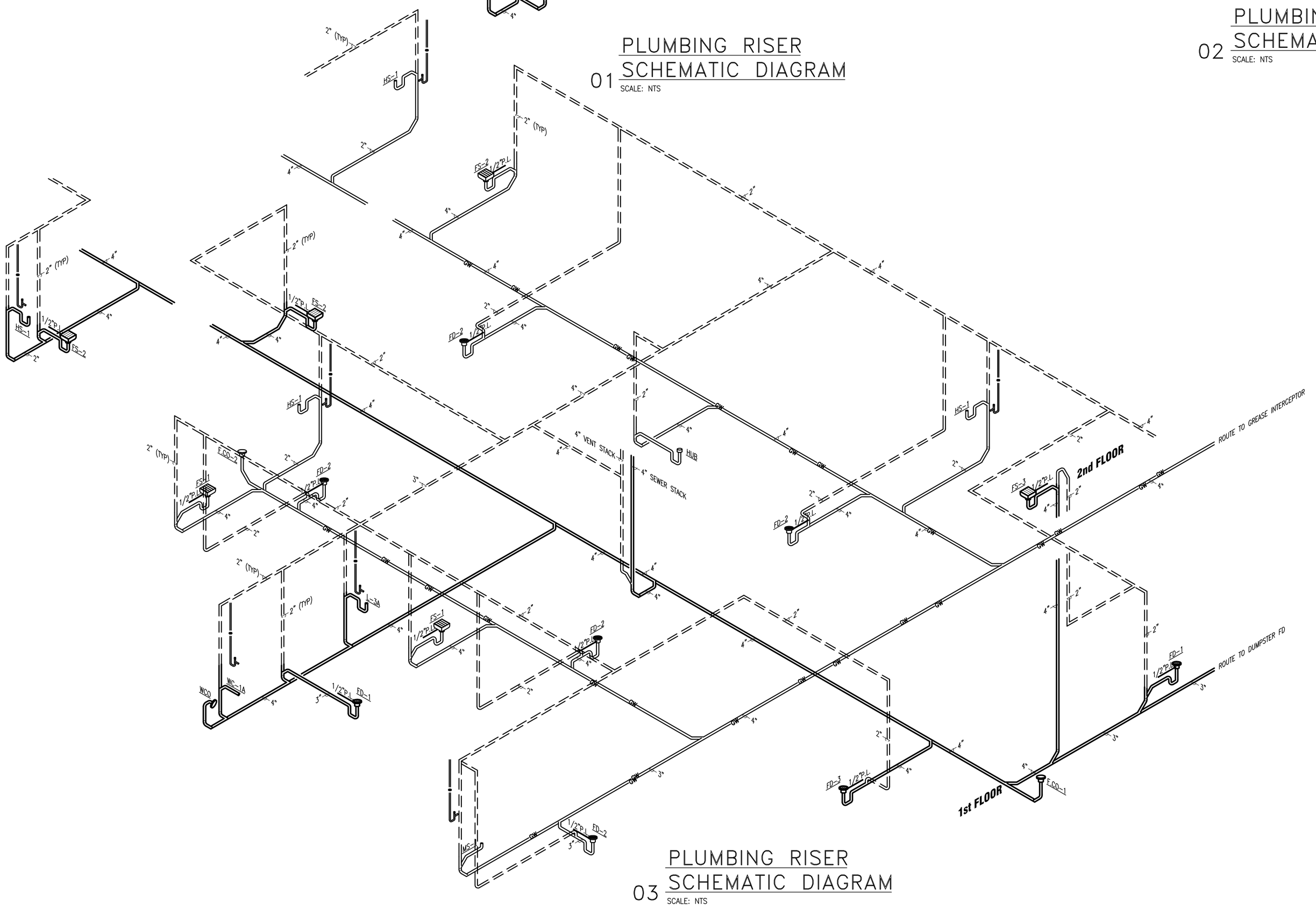

PLUMBING RISER
03 SCHEMATIC DIAGRAM
SCALE: NTS

HALFF
5000 WEST MILITARY, SUITE 100
McALLEN, TEXAS 78503
TEL (956) 664-0286
FAX (956) 664-0282
Halff Associates firm registration number is 312

100% PRICING SET

REVISIONS

The Reese
Phase I
202 S. 1st. Street
Harlingen, TX

PLUMBING RISER
SCHEMATIC DIAGRAMS

MEGAMORPHOSIS
· ARCHITECTURE & INTERIOR DESIGN
1409 N. STUART PLACE RD., SUITE D
PHONE #(956) 428-1779 FAX # (956) 425-5886

PROJECT #
27074
MAR. 26, 2010
P-3.1

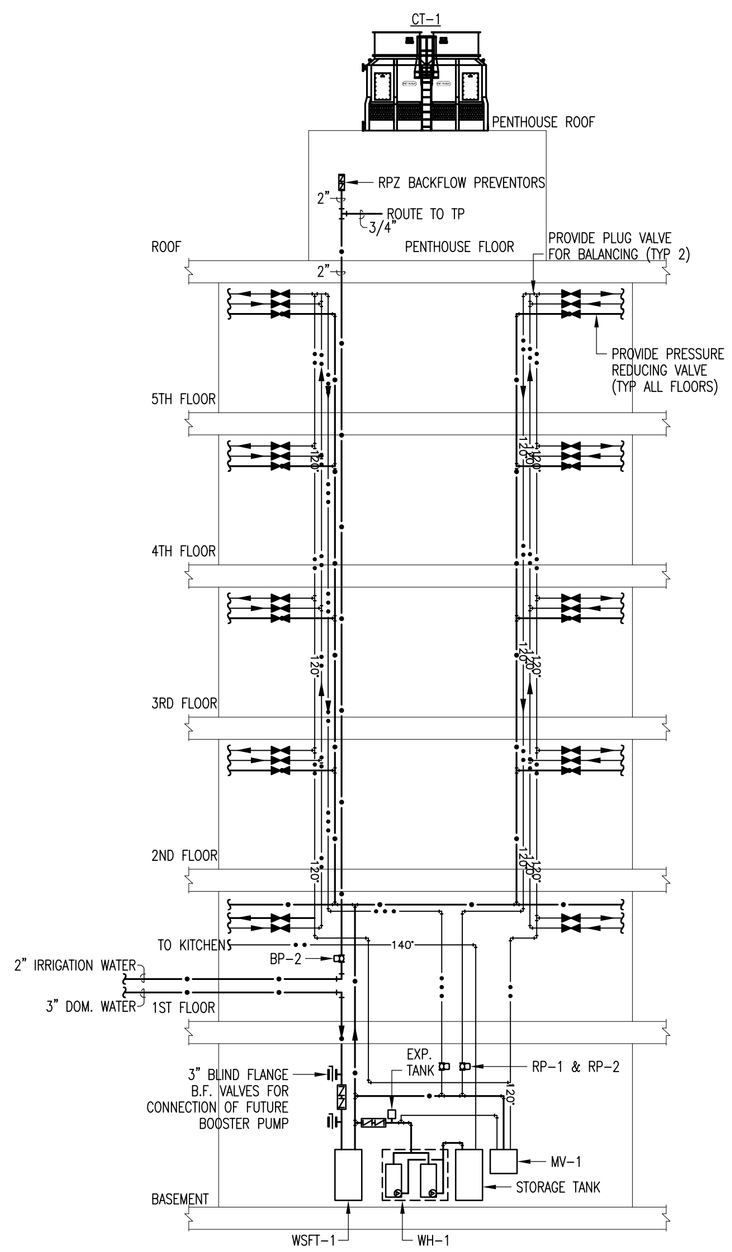

01 WATER RISER SCHEMATIC DIAGRAM

SCALE: NTS

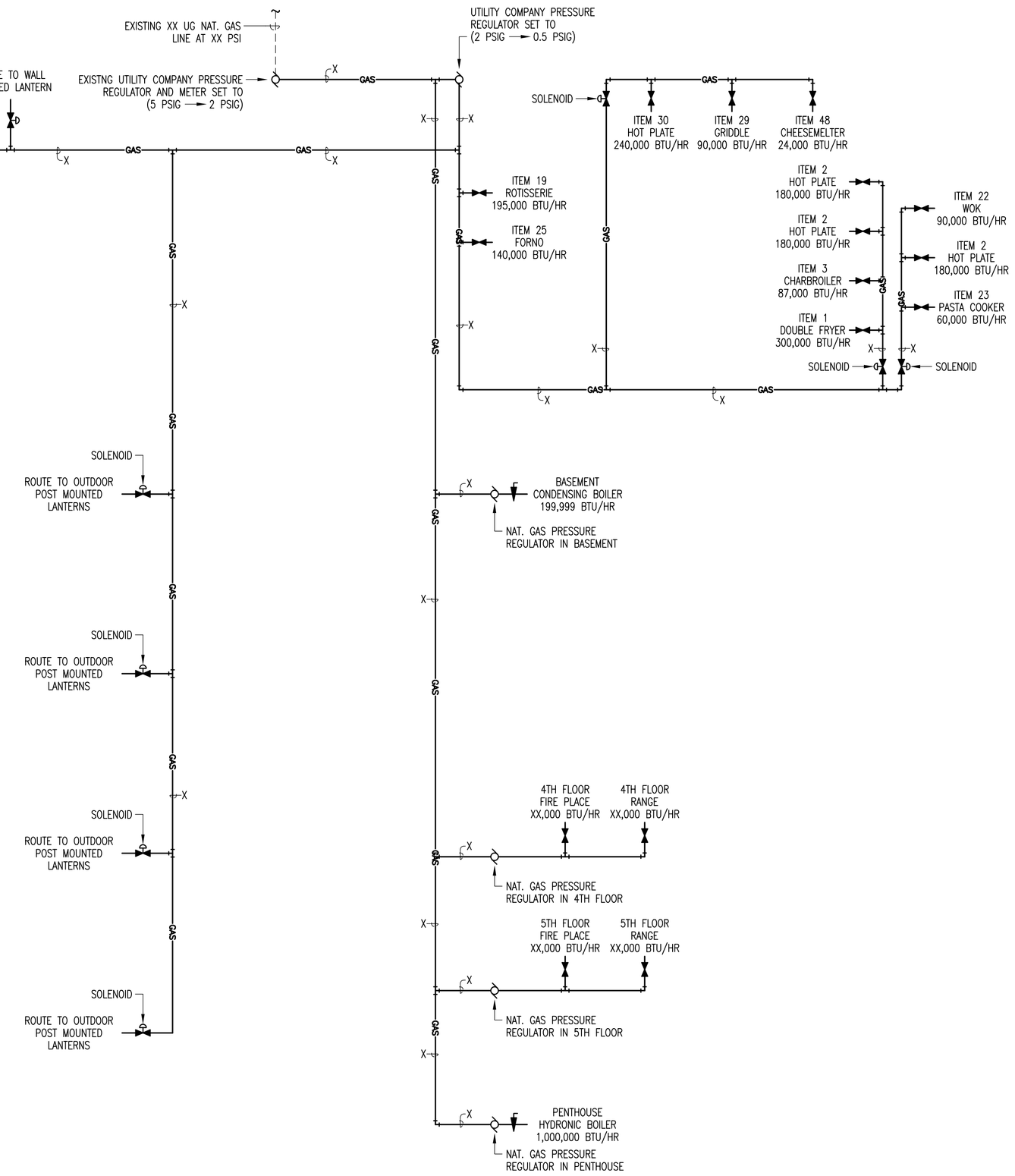

02 NAT. GAS RISER SCHEMATIC DIAGRAM

SCALE: NTS

100% PRICING SET

HALFF
5000 WEST MILITARY, SUITE 100
McALLEN, TEXAS 78503
TEL (956) 664-0286
FAX (956) 664-0282
Halff Associates firm registration number is 312

REVISIONS

The Reese
Phase I
202 S. 1st. Street
Harlingen, TX

PLUMBING RISER SCHEMATIC DIAGRAMS

MEGAMORPHOSIS
·ARCHITECTURE & INTERIOR DESIGN
1409 N. STUART PLACE RD., SUITE D
PHONE #(956) 428-1779 FAX #(956) 425-5886

PROJECT # 27074

MAR. 26, 2010

P-3.2

PLUMBING FIXTURE SCHEDULE

MARK	FIXTURE TYPE	CONNECTION SIZE SEWER	VENT	CW	HW	DESCRIPTION
WC-1	WATER CLOSET WALL MOUNTED	4"	2"	1"	–	VITREOUS CHINA, ELONGATED RIM, SIPHON JET, 1 1/2" TOP SPUD, 1.6 GPF, 15" RIM HEIGHT, WATER CLOSET AND SEAT EQUAL TO KOHLER "KINGSTON" K-4330-0 AND "LUSTRA" K-4670-C OPEN FRONT LESS COVER. COMPLETE WITH DIAPHRAGM HARDWIRED SENSOR FLUSH VALVE EQUAL TO SLOAN "OPTIMA" 111-1.6 ES-S WITH TRAP PRIMER TP AND TRANSFORMER EL-154. PROVIDE NARROW WALL ADJUSTABLE VERTICAL SIPHON JET – NO HUB CARRIER SYSTEM EQUAL TO ZURN Z-1204-N4.
*WC-1A	WATER CLOSET WALL MOUNTED (HANDICAP)	4"	2"	1"	–	SAME AS WC-1, EXCEPT WATER CLOSET TO BE MOUNTED AT APPROPRIATE AGE GROUP ADA COMPLIANT HEIGHT, AND FLUSH VALVE SHALL BE ON APPROACH (WIDE) SIDE OF STALL (ROOM).
*WC-2A	WATER CLOSET WALL MOUNTED (HANDICAP)	4"	2"	1"	–	VITREOUS CHINA, ELONGATED RIM, SIPHON JET, 1 1/2" TOP SPUD, 1.6 GPF, 17" RIM HEIGHT, WATER CLOSET AND SEAT EQUAL TO KOHLER "KINGSTON" K-4330-33 AND "LUSTRA" K-4670-C OPEN FRONT LESS COVER. COMPLETE WITH DIAPHRAGM FLUSH VALVE EQUAL TO SLOAN "OPTIMA" 111-1.6 ES-S WITH TRAP PRIMER TP AND TRANSFORMER EL-154. FLUSH VALVE SHAL BE ON APPROACH (WIDE) SIDE OF STALL (ROOM). PROVIDE NARROW WALL ADJUSTABLE VERTICAL SIPHON JET – NO HUM CARRIER SYSTEM EQUAL TO ZURN ZN-1204-N4.
* U-1A	URINAL WALL MOUNTED (HANDICAP)	2"	2"	3/4"	–	VITREOUS CHINA, ELONGATED RIM, SIPHON JET, 3/4" TOP SPUD, 1.0 GPF, 24" RIM HEIGHT, URINAL EQUAL TO KOHLER "DEXTER" K-5016-ET-33. COMPLETE WITH DIAPHRAGM HARDWIRED SENSOR FLUSH VALVE EQUAL TO SLOAN "OPTIMA" 186-1.0 ES-S WITH TRANSFORMER EL-154. PROVIDE PLATE TYPE CARRIER SYSTEM EQUAL TO ZURN Z-1221. MOUNT AT APPROPRIATE AGE GROUP ADA COMPLIANT HEIGHT.
* L-1A	LAVATORY UNDERCOUNTER (HANDICAP)	2"	2"	1/2"	1/2"	VITREOUS CHINA, LAVATORY EQUAL TO KOHLER "LADENA" K-2214-33. COMPLETE WITH CHROME PLATED, COUNTER MOUNT ELECTRONIC FAUCET EQUAL TO SLOAN FAUCETS SF-2100 LESS TRIM PLATE. COMPLETE WITH VANDAL RESISTANT OUTLET EAF-15, MIXING VALVE BDM AND TRANSFORMER SFP-6. PROVIDE OFFSET GRID STRAINER DRAIN, ANGLE STOPS, SUPPLY-LOOSE KEY, KOHLER P-TRAP K-9035-CP AND PROTECTIVE COVERING.
* L-2A	LAVATORY UNDERCOUNTER (HANDICAP)	2"	2"	1/2"	1/2"	VITREOUS CHINA, LAVATORY EQUAL TO KOHLER "CARAMOND" K-2832-KE. COMPLETE WITH CHROME PLATED, COUNTER MOUNT ELECTRONIC FAUCET EQUAL TO SLOAN FAUCETS SF-2100 LESS TRIM PLATE. COMPLETE WITH VANDAL RESISTANT OUTLET EAF-15, MIXING VALVE BDM AND TRANSFORMER SFP-6. PROVIDE OFFSET GRID STRAINER DRAIN, ANGLE STOPS, SUPPLY-LOOSE KEY, KOHLER P-TRAP K-9035-CP AND PROTECTIVE COVERING.
* L-3A	LAVATORY WALL HUNG (HANDICAP)	2"	2"	1/2"	1/2"	VITREOUS CHINA, SINGLE HOLE, LAVATORY WITHOUT BACKSPLASH EQUAL TO KOHLER "CHESAPEAKE" K-1722-0. COMPLETE WITH CHROME PLATED, DECK MOUNT ELECTRONIC FAUCET EQUAL TO SLOAN FAUCETS SF-2100 LESS TRIM PLATE. COMPLETE WITH VANDAL RESISTANT OUTLET EAF-15, MIXING VALVE BDM AND TRANSFORMER SFP-6. PROVIDE OFFSET DRAIN WITH GRID STRAINER, ANGLE STOPS, SUPPLY-LOOSE KEY, KOHLER P-TRAP K-9035-CP AND PROTECTIVE COVER WITH CLEANOUT. PROVIDE CONCEALED ARM CARRIER SYSTEM EQUAL TO ZURN Z-1231. MOUNT AT APPROPRIATE AGE GROUP ADA COMPLIANT HEIGHT.
MS-1	MOP SINK FLOOR MOUNTED	3"	2"	3/4"	3/4"	TERRAZZO, SQUARE MOP SINK EQUAL TO STERN WILLIAMS "HILOW" HL-1800-BP-2. 28"x28"x12" WITH 6" DROP FRONT WITH STAINLESS STEEL RIM GUARD AND SPLASH CATCHER PANELS. COMPLETE WITH SERVICE SINK FAUCET EQUAL TO CHICAGO "540-LD897SWXF" WITH 8" CENTERS, PAIL HOOK, WALL BRACKET, VACUUM BREAKER SPOUT, AND A.D.A. COMPLIANT HANDLES. STAINLESS STEEL MOP HANGER, 5' REINFORCED RUBBER HOSE AND GRID STRAINER.
FD-4	GENERAL DUTY FLOOR DRAIN	4"	2"	1/2"	–	CAST IRON FLOOR DRAIN EQUAL TO ZURN ZN415D-P. COMPLETE WITH NICKEL BRONZE STRAINER, 1/2" TRAP PRIMER CONNECTION AND HINGED COVER.
FD-1	GENERAL DUTY FLOOR DRAIN	3"	2"	1/2"	–	CAST IRON FLOOR DRAIN EQUAL TO ZURN ZN415B-P. COMPLETE WITH NICKEL BRONZE STRAINER AND 1/2" TRAP PRIMER CONNECTION.
F.CO-1	GENERAL FLOOR CLEANOUT	REFER TO PLANS				MIFAB MODEL "C1100-R-1" ADJUSTABLE FLOOR CLEANOUT. COMPLETE WITH NICKEL BRONZE TOP ASSEMBLY, LACQUERED CAST IRON FLOOR DRAIN WITH ANCHOR FLANGE, AND PRIMARY GASKET SEAL.
Y.CO	GENERAL YARD CLEANOUT	REFER TO PLANS				MIFAB MODEL "C-1220" LACQUERED CAST IRON CLEANOUT, THREADED BRONZE PLUG FOR AIR TIGHT SEAL AND STANDARD REINFORCED SATIN FINISHED NICKEL BRONZE ADJUSTABLE TOP ASSEMBLY.
W.CO	GENERAL WALL CLEANOUT	REFER TO PLANS				MIFAB MODEL "C1430-RD" CAST BRONZE CLEANOUT PLUG. COMPLETE WITH STAINLESS STEEL WALL ACCESS COVER AND ANCHOR SCREW. MOUNT 24" A.F.F.
T.P.	TRAP PRIMER (FLOOR DRAIN)	REFER TO PLANS				PRECISION PLUMBING PRODUCTS "PD-500" PRESSURE DROP ACTIVATED BRASS TRAP SEAL PRIMER WITH INLET/OUTLET OPENINGS OF 1/2" NPT AND TRAP SEAL PRIMER DISTRIBUTION UNIT "DU-U" AS REQUIRED. PROVIDE SHUTOFF VALVE.
A.P.	ACCESS PANEL	REFER TO PLANS				12" x 12" ACCESS PANEL EQUAL TO KARP "DSC-214M". 16 GAUGE STEEL WITH LOCKABLE KEYED DOOR. PRIME COATED WITH RUST INHIBITIVE ELECTROSTATIC POWDER AND PAINT TO MATCH SURROUNDING AREAS. COORDINATE LOCATION TO AVOID CONFLICTS WITH GRAB BARS AND/OR OTHER EQUIPMENT.
FD-2	KITCHEN FLOOR DRAIN	4"	2"	1/2"	–	MIFAB MODEL "F1000-7-3" STAINLESS STEEL FLOOR DRAIN. COMPLETE WITH STAINLESS STEEL STRAINER, LACQUERED CAST IRON FLOOR DRAIN WITH ANCHOR FLANGE, AND 1/2" TRAP PRIMER CONNECTION.
FD-3	KITCHEN FLOOR DRAIN	4"	2"	1/2"	–	MIFAB MODEL "F1100-EF-7-3" STAINLESS STEEL FUNNEL FLOOR DRAIN. COMPLETE WITH STAINLESS STEEL STRAINER, LACQUERED CAST IRON FLOOR DRAIN WITH ANCHOR FLANGE, AND 1/2" TRAP PRIMER CONNECTION.
FS-1	KITCHEN FLOOR SINK	4"	2"	1/2"	–	MIFAB MODEL "FS1744-3-150-7" 12"x12"x10" FLOOR SINK. COMPLETE WITH STAINLESS STEEL RIM AND 1/2 GRATE, CAST IRON FLOOR SINK WITH ANCHOR FLANGE, 1/2" TRAP PRIMER CONNECTION AND ALUMINUM DOME STRAINER
FS-2	KITCHEN FLOOR SINK	3"	2"	1/2"	–	MIFAB MODEL "FS1523-3-150-7" 8"x8"x6" FLOOR SINK. COMPLETE WITH STAINLESS STEEL RIM AND 1/2 GRATE, CAST IRON FLOOR SINK WITH ANCHOR FLANGE, 1/2" TRAP PRIMER CONNECTION AND ALUMINUM DOME STRAINER
FS-3	MECHANICAL FLOOR SINK	4"	2"	1/2"	–	MIFAB MODEL "FS1744-1-175-7" 12"x12"x10" FLOOR SINK. COMPLETE WITH NICKEL BRONZE RIM AND 1/2 GRATE, CAST IRON FLOOR SINK WITH ANCHOR FLANGE, 1/2" TRAP PRIMER CONNECTION AND ALUMINUM DOME STRAINER
F.CO-2	KITCHEN CLEANOUT	3"	–	–	–	MIFAB MODEL "C1000-R/S-3" STAINLESS STEEL FLOOR CLEANOUT. COMPLETE WITH STAINLESS STEEL COVER/PLUG, LACQUERED CAST IRON FLOOR DRAIN WITH ANCHOR FLANGE, AND PRIMARY GASKET SEAL.
G.I.-1	GREASE INTERCEPTOR	4"	2"	–	–	GREASE INTERCEPTOR SHALL BE EQUAL TO PARK "GT-2000" COMPLETE WITH SAMPLE WELL "SWB-154"
S.I.-1	SOLIDS INTERCEPTOR	2"	2"	–	–	STRAINER BASKET, 14GA, 304 STAINLESS STEEL, 10 GMP, PRE-STRAINER EQUAL TO ZURN "Z1183-300-ZS". ABOVE SLAB INSTALLATION, MOUNT NEXT TO GARBAGE DISPOSAL.
HB-2	HOSE BIBB	–	–	1/2"	–	BACKFLOW PROTECTED, EXPOSED, WALL FAUCET EQUAL TO WOODFORD "24". COMPLETE WITH BRASS FINISH, OPERATING LOOSE TEE KEY HANDLE, AND 1/2" INLET CONNECTION AT DUMPSTER.
HB-1	HOSE BIBB	–	–	–	1/2"	BACKFLOW PROTECTED, EXPOSED, WALL FAUCET EQUAL TO WOODFORD "26". COMPLETE WITH POLISHED CHROME FINISH OPERATING LOOSE TEE KEY HANDLE, AND 1/2" INLET CONNECTION AT PIZZA KITCHEN.
KT-1	KETTLE TROUGH	4"	2"	–	–	60"x8" KETTLE TROUGH EQUAL TO AMTEKCO FT-60x8-S/S SUBWAY GRATE 14 GAUGE, TYPE 304 STAINLESS STEEL. TROUGH SHALL SLOPE TO WASTE OUTLET WITH STRAINER.
HR-1	HOSE REEL ASSEMBLY	–	–	1/2"	1/2"	COMPLETE RETRACTABLE HOSE REEL ASSEMBLY EQUAL TO T&S BRASS B-1434-RG. ALL IN ONE SYSTEM WITH EXPOSED PIPING AND ACCESSORIES. INCLUDES HOSE REEL, WALL MOUNT MIXING FAUCET, SHUT OFF VALVE, VACUUM BREAKER AND FLEXIBLE WATER SUPPLY HOSE.
HS-1	KITCHEN HAND SINK WALL HUNG	2"	2"	1/2"	1/2"	VITREOUS CHINA, 4" CENTERS, LAVATORY WITH BACKSPLASH EQUAL TO KOHLER "GREENWICH" K-2030-0. COMPLETE WITH CHROME PLATED, 4" WRIST BLADE HANDLES, DECK MOUNT MIXING FAUCET EQUAL TO T&S BRASS B-0892. PROVIDE OFFSET DRAIN WITH GRID STRAINER, ANGLE STOPS, SUPPLY-LOOSE KEY, CHROME PLATED P-TRAP WITH CLEANOUT AND PROTECTIVE COVERING. PROVIDE CONCEALED ARM CARRIER SYSTEM EQUAL TO ZURN Z-1231.
WSFT-1	WATER SOFTENER SYSTEM	REFER TO PLANS				DUPLEX PROGRESSIVE, WATER METER, DEMAND AUTOMATIC WATER SOFTENER EQUAL TO CULLIGAN SERIES HI-FLO 3E HCE-300-2. CAPABLE OF SUPPLYING 12503 GALLONS OF SOFTENED WATER, DESIGN FLOW RATE OF 75.0 GPM WITH A RATED PRESSURE DROP OF 5.4 PSI AND PEAK FLOW RATE OF 170.0 GPM.
RO-1	REVERSE OSMOSIS SYSTEM	REFER TO PLANS				REVERSE OSMOSIS SYSTEM EQUAL TO CULLIGAN A PLUS SERIES AP-2. COMPLETE WITH 500 GAL STORAGE TANK. PUMP PRESSURE TANK, UV LIGHT, AND CARBON FILTERS.
RD-1	ROOF DRAIN	REFER TO PLANS				ZURN "Z-100-ZC-EA-C-R" 6" ROOF DRAINS WITH ALUMINUM LOW SILHOUETTE DOME, MEMBRANE FLASHING CLAMP, GRAVEL GUARD, ADJUSTABLE ASSEMBLY, UNDERDECK CLAMP, AND SUMP RECEIVER.
BFP-1	BACKFLOW PREVENTOR	REFER TO PLANS				DOUBLE DETECTOR CHECK VALVE ASSEMBLY WITH FIRE DEPARTMENT CONNECTION EQUAL TO PARK ENVIRONMENTAL EQUIPMENT DDBPPAD-ENC. COMPLETE WITH AN ABOVE GROUND INSTALLATION ENCLOSURE. SIZE SHALL BE DETERMINED BY A LICENSED FIRE SPRINKLER SPECIALIST.

* REFER TO ARCHITECT'S INTERIOR ELEVATIONS FOR EXACT MOUNTING HEIGHTS OF FIXTURES.

PLUMBING CONTRACTOR SHALL BE RESPONSIBLE FOR PROVIDING, INSTALLING, AND FINAL CONNECTION OF TRANSFORMER AND LOW VOLTAGE WIRING SERVING INFRARED SENSING WATER CLOSETS, LAVATORIES AND URINALS.

MIXING VALVE SCHEDULE

MARK	MAX FLOW (GPM) AT 110°F	MAX Δ PVALVE (PSI)	CONNECTIONS INLET	OUTLET	CABINET INLETS	OUTLET	STYLE	MATERIAL	MANUFACTURER & MODEL	
MV-1	1	–	1/2"	1/2"	SIDE	BOTTOM	INLINE	CHROME	LEONARD 220-CP POINT OF USE THERMOSTATIC MIXING VALVE	REFER TO PLAN
MV-2	51	20	1"	1"	BOTTOM	BOTTOM	WALL MNT.	ST. STEEL	BRADLEY S59-3080/B/SS HLBO-C HI-LO THERMOSTATIC MIXING VALVE	BASEMENT

RECIRCULATING PUMP SCHEDULE

MARK	GPM	FEET HEAD	AMPS	WATTS	RPM	VOLTS/PHASE	REMARKS	
RP-1	10	30	2.1	125	3300	115/60/1	ITT INDUSTRIES BELL & GOSSETT, SERIES PL PUMP PL-36B-LF; LEAD-FREE BRONZE CONSTRUCTION	BASEMENT
RP-2	10	30	2.1	125	3300	115/60/1	ITT INDUSTRIES BELL & GOSSETT, SERIES PL PUMP PL-36B-LF; LEAD-FREE BRONZE CONSTRUCTION	BASEMENT

WATER HEATER SCHEDULE

MARK	STORAGE GALLONS	RECOVERY G.P.H.	DEGREE RISE °F	WATER TEMP. LEAVING	WATER INLET	WATER OUTLET	DESCRIPTION	
WH-1	257	X	100° F	140°F	1 1/4"	1 1/4"	HAMILTON ENGINEERING, GAS FIRED CONDENSING WATER HEATER EVO (2) HW199. PRE-PLUMBED SYSTEM COMPLETE WITH (2) UNIT CONFIGURATION, (2) PUMPS, 257 STORAGE TANK WITH INSULATION KIT, TANK SENSOR, T&P RELIEF VALVE, EXPANSION TANK, AND DELUXE PACKAGE.	BASEMENT (1)

NOTES:
1. BOILER SHALL BE INSTALLED TO MEET ALL MANUFACTURER'S RECOMMENDED CLEARANCES IN ACCORDANCE WITH REVISED TEXAS BOILER CODE.

BOOSTER PUMP SCHEDULE

MARK	GPM	FEET HEAD	HP	NPSH	RPM	VOLTS/PHASE	REMARKS	
BP-1	120	138	5	9	3500	380/460 VAC, 3PH	ITT GOULDS PUMPS, 3SV DUPLEX, AQUAFORCE BOOSTER PACKAGE V3BD23JC4AC, 2 PUMPS	BASEMENT
BP-2	25	40	1	–	3500	230 VAC, 1PH	ITT GOULDS PUMPS, 316L STAINLESS STEEL PUMP, AQUABOOST II 1AB22HM1E2DO	FIRST FLOOR

ELEVATOR PIT PUMP SCHEDULE

MARK	LOCATION	SELECTION BASED ON MFR	MODEL	GPM	HP	RPM	MOTOR DATA WATTS	VOLTS/PH/HZ	NOTES
ESP-1	BOTH ELEVATORS	BELL AND GOSSET	2EC0511	50	1/2	3500	720	115/1/60	(2)

(2) PROVIDE OIL SMART SWITCH AND ENVIROMENT PROTECTOR PANEL EQUAL TO CENTRIPRO A1SEEWATERKIT. INSTALL PER TDLR ELEVATOR RULES.

LIFT STATION SCHEDULE

ITEM	MANUF.	MODEL	GPM	H.P.	FT. OF HEAD	VOLTS/PH/AMP	REMARKS	
LS-1	ITT	2WC051	25	0.5	20	115V, 1PH, 13A	BELL AND GOSSET "2WC" SUBMERSIBLE SEWAGE PUMP, DUPLEX	(3)
LS-2	ITT	3WDA5034	220	5	45	460V, 3PH, 16.4A	BELL AND GOSSET "3WDA" SUBMERSIBLE SEWAGE PUMP, DUPLEX	(4)

(3) PROVIDE ITT CENTRIPRO DUPLEX NEMA1 INDOOR PANEL D10020N1 SINGLE PHASE CONTROL PANEL

(4) PROVIDE ITT CENTRIPRO GUIDE RAIL SYSTEM A10-30 3"X4" WITH 3" 125 LBS ANSI FLANGED DISCHARGE.
PROVIDE ITT CENTRIPRO DUPLEX NEMA4X WEATHERPROFF PANEL D31620 THREE PHASE CONTROL PANEL

01 PLUMBING SCHEDULES
SCALE: NTS

100% PRICING SET

HALFF
5000 WEST MILITARY, SUITE 100
McALLEN, TEXAS 78503
TEL (956) 664-0286
FAX (956) 664-0282
Halff Associates firm registration number is 312

REVISIONS

The Reese
Phase I
202 S. 1st. Street
Harlingen, TX

PLUMBING SCHEDULES AND NOTES

MEGAMORPHOSIS
• ARCHITECTURE & INTERIOR DESIGN
1409 N. STUART PLACE RD., SUITE D
PHONE #(956) 428-1779 FAX # (956) 425-5886

PROJECT # 27074
MAR. 26, 2010
P-4.1

PLUMBING SYMBOL LEGEND

SYMBOL	DESCRIPTION	SYMBOL	DESCRIPTION	SYMBOL	DESCRIPTION	SYMBOL	DESCRIPTION
	DOMESTIC COLD WATER LINE	—GAS—	GAS LINE	F.C.O.	FLOOR CLEANOUT		UNION
	DOMESTIC HOT WATER LINE	—AIR—	AIR LINE		FLOOR SINK		BRANCH – TOP CONNECTION
	DOMESTIC HOT WATER RETURN LINE	—AW—	ACID WASTE LINE		FLOOR DRAIN		PIPE RISER
—TW—	DOMESTIC TEMPERED WATER LINE	—RD—	ROOF DRAIN LINE		ROOF DRAIN		PIPE DROP
	SANITARY SEWER VENT LINE	—OD—	OVERFLOW DRAIN LINE		HUB DRAIN		THERMOMETER
	SANITARY WASTE LINE		BALL VALVE		WALL HYDRANT		DIRECTION OF FLOW
—CD—	CONDENSATE LINE		CHECK VALVE		HOSE BIBB	CV	CALIBRATING VALVE
—GW—	GREASE WASTE LINE		GATE VALVE		WATER HAMMER ARRESTOR	WCO	WALL CLEANOUT

NOTE: NOT ALL SYMBOLS MAY BE USED ON THIS PROJECT

DEMOLITION NOTES:

1. THE CONTRACTOR IS FULLY RESPONSIBLE FOR PERFORMING THE DEMOLITION WORK UNDER THIS SECTION OF THE PROJECT IN FULL COMPLIANCE WITH ALL APPLICABLE LOCAL, STATE, AND FEDERAL CODES. IF THE CONTRACTOR DETERMINES THAT THE CONTRACT DOCUMENTS AND PLANS ARE NOT IN COMPLIANCE WITH THE APPLICABLE CODES, HE SHALL INFORM THE ARCHITECT PRIOR TO CONSTRUCTION START FOR DIRECTION. FAILURE TO DO SO SHALL NOT RELIEVE THE CONTRACTOR OF HIS RESPONSIBILITY TO MEET CODE REQUIREMENTS AND REWORK SHALL BE AT CONTRACTORS EXPENSE. APPLICABLE CODES AND STANDARDS ON DEMOLITION WORK SHALL INCLUDE THOSE PUBLISHED BY OSHA AND EPA. AN ASBESTOS SURVEY SHALL BE KEPT ON SITE AT ALL TIMES PER TEXAS DEPARTMENT OF HEALTH REQUIREMENTS.

2. ALL DUST PRODUCTION , SMOKE PRODUCTION AND NOISE SHALL BE SUBJECT TO REAL TIME REVIEW BY THE ARCHITECT. WORK SHALL BE SHUT DOWN DURING CRITICAL ACTIVITIES BY FORMAL REQUEST FROM THE DESIGNATED AUTHORITY OR CONTRACTING ARCHITECT. WORK IN DUSTY AREAS SHALL BE CONTROLLED WITH TEMPORARY PARTIONS. FLAME CUTTING SHALL BE MINIMIZED TO ELIMINATE SMOKE PRODUCTION. PROVIDE FIRE EXTINGUISHERS IN THE IMMEDIATE AREA.

3. GENERAL CONTRACTOR SHALL BE ADVISED OF ALL NEW PROPOSED ROOF OPENINGS.

4. ON ANY WORK SHOWN ON MECHANICAL DRAWINGS WHICH REQUIRES DEMOLITION OF BUILDING STRUCTURES AND FINISHES, IT SHALL BE THE RESPONSIBILITY OF THE CONTRACTOR TO COMPLETE THE NECESSARY DEMOLITION. CONTRACTOR SHALL PATCH AND REPAIR ALL BUILDING DAMAGE CREATED BY DEMOLITION WORK. PATCHING SHALL BE COMPLETED WITH THE SAME MATERIALS AS THE SURROUNDING AREAS, OR WITH ARCHITECT–APPROVED PATCHING MATERIALS.

5. ALL OPENINGS CUT IN MASONRY AND PLASTER WALLS OR CONCRETE FLOORS SHALL BE CORE–DRILLED OR SAWED WHEN POSSIBLE. CONTRACTOR SHALL CHECK BUILDING CONSTRUCTION WITH STRUCTURAL ENGINEER BEFORE MAKING PENETRATIONS TO AVOID CUTTING THROUGH STRUCTURAL BEAMS AND REINFORCING. CONTRACTOR SHALL INFORM THE ENGINEER IF REINFORCING IS CUT OR DAMAGED WHILE MAKING OPENINGS AS REQUIRED BY DRAWINGS AND SPECIFICATIONS. PATCH AND SEAL OPENINGS WITH 8000 PSI CEMENT GROUT. INSTALL DECORATIVE TRIM (EQUIPMENT FLANGES, FRAMING, OR ESCUTCHEONS) AROUND OPENINGS IN FINISHED AREAS. COORDINATE ALL CUTTING AND PATCHING WITH THE OTHER TRADES.

6. ALL SURFACES COVERED BY "SPRAY POLY" AND PROTECTED BY TEMPORARY PARTITIONS SHALL REMAIN PROTECTED THROUGHOUT THE PROJECT. REMOVE THE PROTECTIVE BARRIERS ONLY AFTER THE NEW EQUIPMENT PIPING AND DUCTWORK IS INSTALLED. PATCH AND MAINTAIN THE PROTECTIVE BARRIERS DURING CONSTRUCTION. COVER ALL EQUIPMENT OPENINGS WITH 4 MIL. POLY AND DUCT TAPE IN PLACE.

7. ALL NEW ROOF PENETRATIONS SHALL BE ROUTED THRU ANY EXISTING OPENING WHEREVER POSSIBLE. LARGER AND NEW OPENINGS SHALL BE KEPT TO A MINIMUM.

8. CONTRACTOR SHALL BE FULLY RESPONSIBLE FOR ALL UNDERGROUND UTILITIES IN AREAS OF EXCAVATION WORK.

9. CONTRACTOR SHALL REMOVE AND RETURN ANY AND ALL EXISTING EQUIPMENT/MATERIALS TO OWNER. OWNER SHALL HAVE FULL RIGHT OF OWNERSHIP UNLESS SPECIFIED OTHERWISE.

10. CONTRACTOR SHALL KEEP THE ENTIRE MEP DEMOLITION SITE CLEAN AT ALL TIMES.

11. CONTRACTOR AND OWNER SHALL BE FULLY RESPONSIBLE TO IDENTIFY ANY AND ALL ASBESTOS PRESENT IN THE BUILDING PRIOR TO DEMOLITION AS REQUIRED BY LAW.

12. COORDINATION AMONG OTHER CONSTRUCTION DISCIPLINES PRIOR TO DEMOLITION IS MANDATORY.

13. CONTRACTOR SHALL IDENTIFY ALL WATER CONNECTION LINES, NATURAL GAS LINES AND SANITARY SEWER LINES PRIOR TO COMMENCING DEMOLITION WORK. SITE VISIT IS MANDATORY. PRIOR TO BIDDING.

14. THE OWNER SHALL RETAIN THE RIGHT OF FIRST REFUSAL ON ALL REMOVED EQUIPMENT. IF THE OWNER DOES NOT ELECT TO KEEP ANY REMOVED EQUIPMENT, IT SHALL BECOME THE PROPERTY AND RESPONSIBILITY OF THE CONTRACTOR.

GENERAL NOTES

A. PLUMBING CONTRACTOR SHALL ADHERE TO ALL CITY CODES, ORDINANCES, AND OTHER STATE AND LOCAL CODES THAT HAVE AUTHORITY OVER THIS PROJECT.

B. PLUMBING CONTRACTOR SHALL EXTEND ALL CONDENSATE AND INDIRECT DRAINS FROM EQUIPMENT TO FLOOR DRAIN, IN MECHANICAL ROOM.

C. PLUMBING CONTRACTOR TO COORDINATE WITH MECHANICAL CONTRACTOR FOR ANY INSTALLATION OF PIPING AND DUCTWORK PRIOR TO BEGINNING OF CONSTRUCTION

D. PLUMBING CONTRACTOR SHALL TERMINATE ALL WATER ROUGH–IN WITH SHUT–OFF VALVES BEFORE CONNECTING TO EQUIPMENT AND RELATED FIXTURES.

E. REFER TO ARCHITECTS DRAWINGS FOR MOUNTING HEIGHTS OF ALL PLUMBING FIXTURES

F. INSULATE "P" TRAPS AND SUPPLIES AT HANDICAP LAVATORIES WITH INSULATION KIT.

G. PROVIDE VACUUM BREAKER TO ALL FIXTURES WITH HOSE CONNECTION AND APPLIANCES WITH DIRECT CONNECTIONS TO DOMESTIC WATER.

H. ALL FLOOR DRAINS SHALL BE PROVIDED WITH TRAP PRIMER CONNECTION.

I. PROVIDE STOPS AND WATER HAMMERS AT EACH FIXTURE OR GROUP OF FIXTURES

J. ALL VENTS THROUGH ROOF SHALL BE FLASHED A MINIMUM OF 12" ABOVE ROOF. ALL VENTS SHALL BE MINIMUM OF 10' AWAY FROM ANY OUTSIDE INTAKE.

K. PROVIDE CEILING ACCESS PANEL FOR WATER ISOLATION VALVES LOCATED IN NON–ACCESSIBLE AREAS.

L. PROVIDE INTUMESENT PUTTY AND SLEEVE ALL PIPING CROSSING FIRE RATED WALLS.

M. SLEEVE ALL OUTSIDE WALL, FLOOR SLAB, AND BEAM PENETRATIONS. COORDINATE WITH STRUCTURAL.

N. DOMESTIC WATER LINE SHALL BE ROUTED, SO AS TO AVOID CROSSING OVER LIGHT FIXTURES WHERE POSSIBLE AND ELECTRICAL PANELS IN ALL CASES.

O. ALL GAS PIPING LOCATED IN BUILDING SHALL BE INSTALLED IN A VENTED SPACE OR ENCASED IN A DIRECTLY VENTED CAST IRON PIPE. NO GAS LINE PIPING SHALL BE INSTALLED IN A CONFINED SPACE OR BELOW ANY BUILDING.

P. ALL GAS PIPING INSTALLATIONS SHALL MEET THE REQUIREMENTS OF NFPA–54. ALL GAS LINES SERVICING EQUIPMENT SHALL HAVE A GAS–COCK AT EACH UNIT CONNECTION ALONG WITH A DIRT LEG AND SCREEN DEVICE.

Q. PROVIDE A MAIN SHUT–OFF VALVE TO EACH DISTINCT AREA OF A FACILITY, PRIMARY ENTRANCE, EACH FLOOR, EACH WING, ETC.

R. VERIFY THAT GAS LINE SIZING AND LINE PRESSURES MATCH THE INSTALLED EQUIPMENT BEFORE FABRICATION OF THE GAS SYSTEM, PROVIDE ALL NECESSARY REGULATIONS.

S. ROOF–MOUNTED GAS PIPING SHALL CONTAIN A SWING JOINT AT ALL VERTICAL RISERS AND EXPANSION LOOPS TO OFFSET A 100 DEGREE F. TEMPERATURE CHANGE. ALL ROOF MOUNTED PIPE SHALL BE SUPPORTED ON ROLLER OR SLIDE BLOCK SUPPORTS.

T. INFORMATION ON THIS PLAN HAS BEEN OBTAINED FROM EXISTING DRAWINGS AND SITE SURVEY. CONTRACTOR SHALL FIELD VERIFY EXISTING CONDITIONS PRIOR TO COMMENCING WORK. ANY DISCREPANCIES BETWEEN EXISTING CONDITIONS AND CONSTRUCTION DOCUMENTS SHALL BE REPORTED IMMEDIATELY TO THE ENGINEER AND/OR ARCHITECT.

U. PLUMBING CONTRACTOR SHALL COORDINATE EXACT LOCATION WITH CIVIL ENGINEER, AND CITY OF HARLINGEN PRIOR TO INSTALLATION. FAILURE TO COMPLY SHALL RESULT IN CORRECTING AT NO COST TO THE OWNER REPRESENATIVE.

V. GENERAL CONTRACTOR TO CONTACT CITY WATER, GAS, AND WASTE DEPARTMENTS 48 HOURS PRIOR TO TAP. NO EXCEPTIONS.

01 PLUMBING SCHEDULES AND NOTES
SCALE: NTS

HALFF
5000 WEST MILITARY, SUITE 100
McALLEN, TEXAS 78503
TEL (956) 664-0286
FAX (956) 664-0282
Halff Associates firm registration number is 312

100% PRICING SET

REVISIONS

The Reese
Phase I
202 S. 1st. Street
Harlingen, TX

PLUMBING SCHEDULES AND NOTES

MEGAMORPHOSIS
·ARCHITECTURE & INTERIOR DESIGN
1409 N. STUART PLACE RD., SUITE D
PHONE #(956) 423-1779 FAX # (956) 425-5886

PROJECT # 27074
MAR. 26, 2010
P-4.2

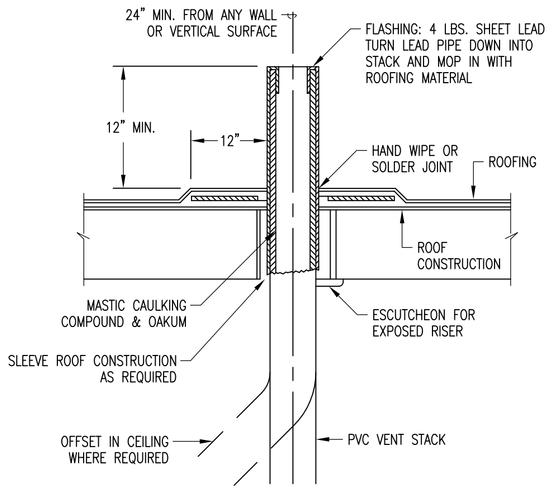

NOTES:
ALL VTR'S SHALL BE LOCATED MINIMUM 25' FROM ANY OUTSIDE AIR DEVICE. ANY VENT THAT IS WITHIN 10' OF ANY DOOR, WINDOW, OR EXHAUST OPENING SHALL EXTEND NOT LESS THAT 3' ABOVE SUCH.

01 VENT THROUGH ROOF DTL
SCALE: N.T.S.

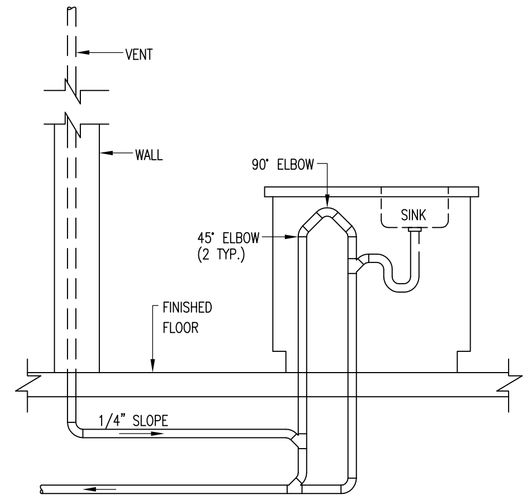

04 ISLAND VENTING DTL
SCALE: N.T.S.

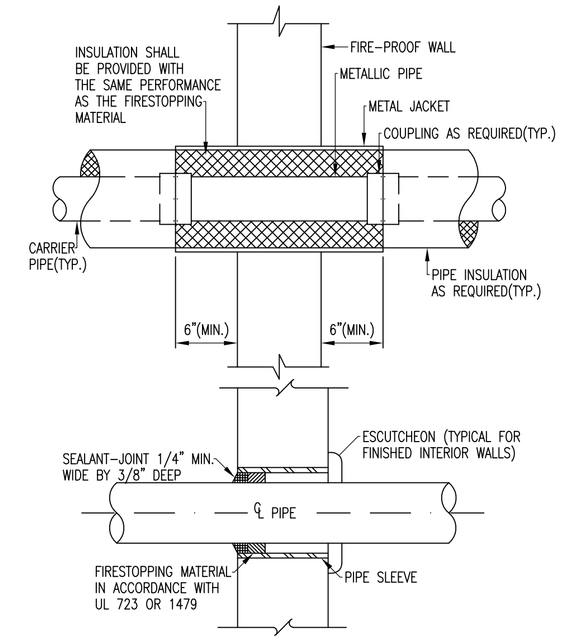

08 TYP FIRE PROOF & WALL PENETRATION
SCALE: N.T.S.

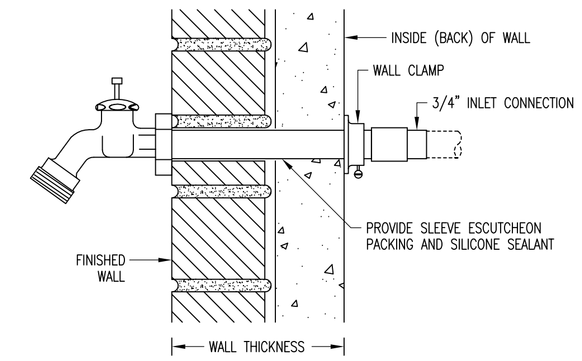

11 HOSE BIBB DTL
SCALE: N.T.S.

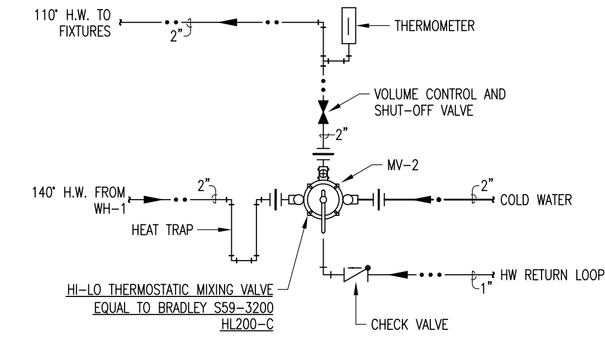

NOTES:
1. THERMOSTATIC MIXING VALVE SHALL BE ASSEMBLED ACCORDING TO MANUFACTURER RECOMMENDATIOS
2. INSTALL THERMOSTATIC MV-2 INSIDE LAUNDRY ROOM.

15 THERMOSTATIC MIXING VALVE ASSEMBLY
SCALE: N.T.S.

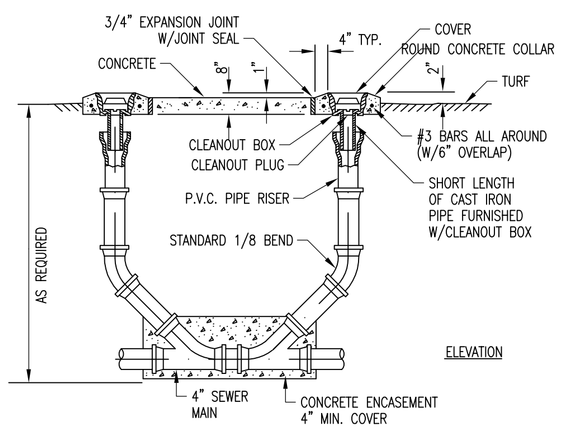

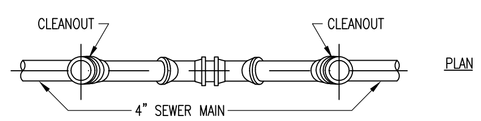

02 EXTERIOR TWO-WAY YARD CLEANOUT DTL
SCALE: N.T.S.

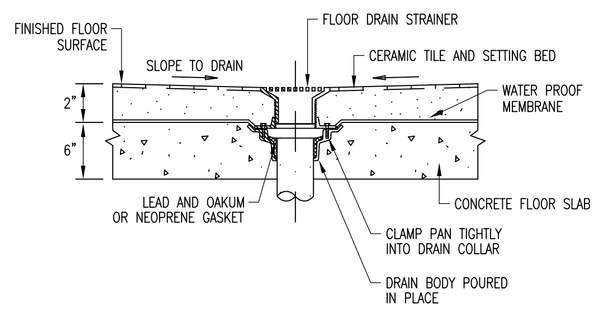

05 OPEN AREA FLOOR DRAIN DTL
SCALE: N.T.S.

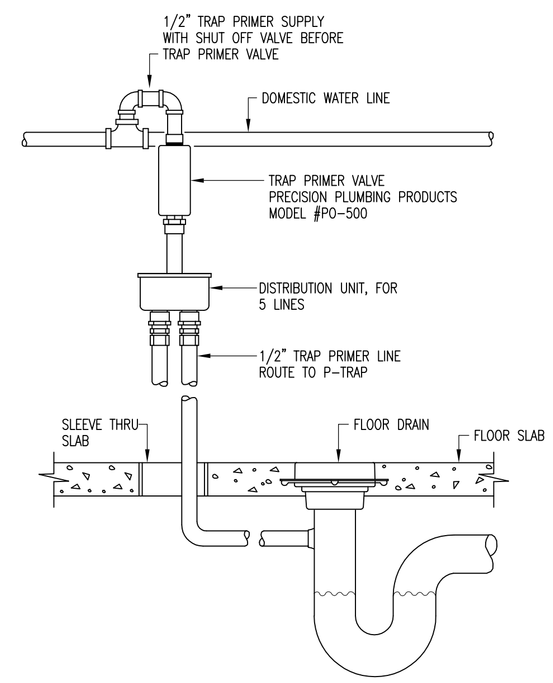

09 TRAP SEAL PRIMER DTL
SCALE: N.T.S.

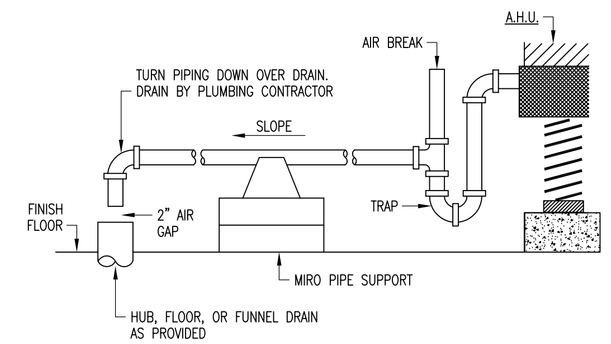

12 CONDENSATE DRAIN DTL
SCALE: N.T.S.

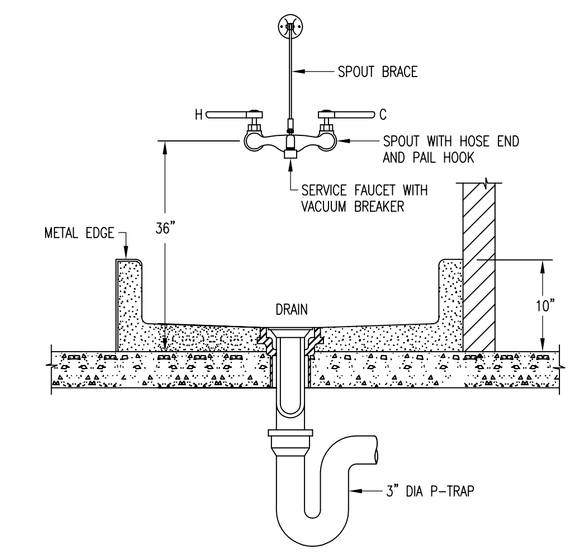

16 MOP SINK SECTION
SCALE: N.T.S.

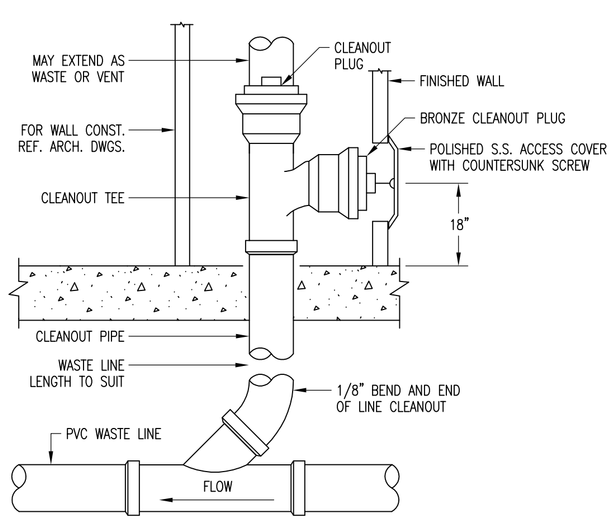

03 WALL CLEANOUT DTL
SCALE: N.T.S.

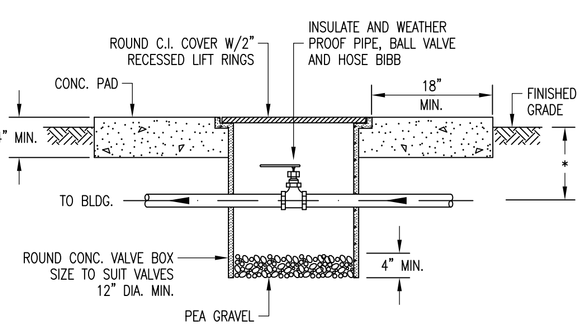

06 VALVE BOX DTL
SCALE: N.T.S.

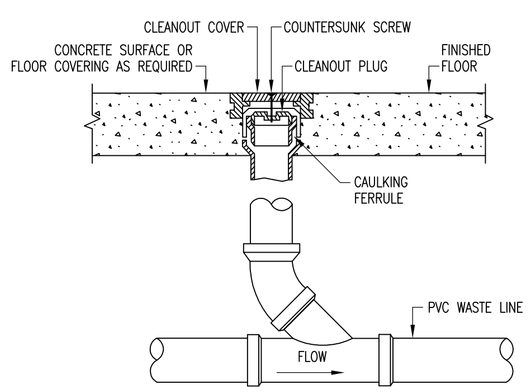

07 FLOOR CLEANOUT DTL
SCALE: N.T.S.

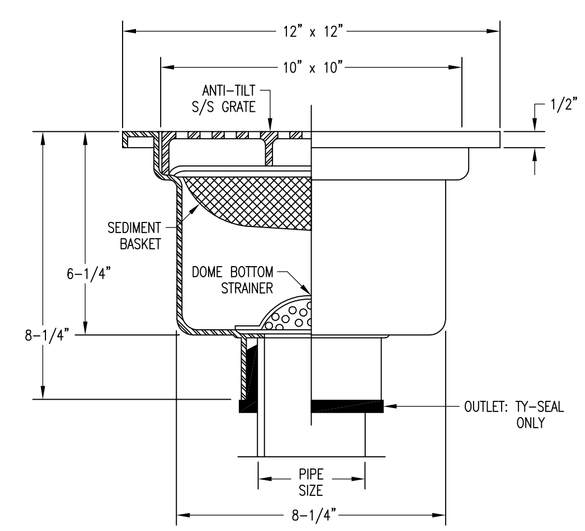

10 FLOOR SINK SECTION
SCALE: N.T.S.

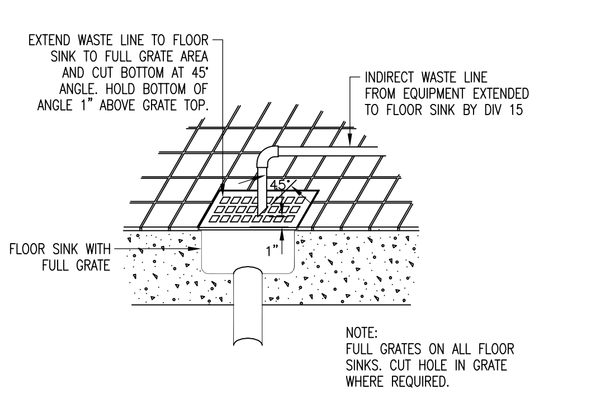

13 INDIRECT WASTE LINE DTL
SCALE: N.T.S.

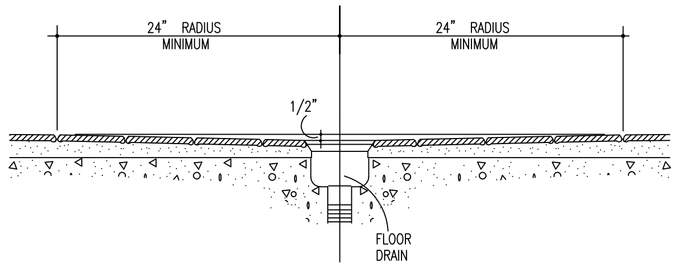

14 TYP FLOOR DRAIN SECTION
SCALE: N.T.S.

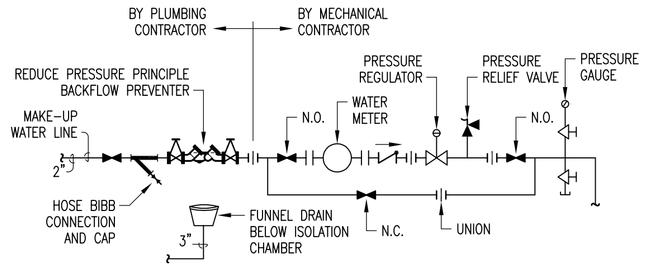

17 MAKE-UP WATER SYSTEM
SCALE: N.T.S.

HALFF
5000 WEST MILITARY, SUITE 100
McALLEN, TEXAS 78503
TEL (956) 664-0286
FAX (956) 664-0282
Halff Associates firm registration number is 312

100% PRICING SET

REVISIONS

The Reese
Phase I
202 S. 1st. Street
Harlingen, TX

PLUMBING DETAILS

MEGAMORPHOSIS
ARCHITECTURE & INTERIOR DESIGN
1409 N. STUART PLACE RD., SUITE D
PHONE #(956) 428-1779 FAX # (956) 425-5886

PROJECT # 27074
MAR. 26, 2010
P-4.3

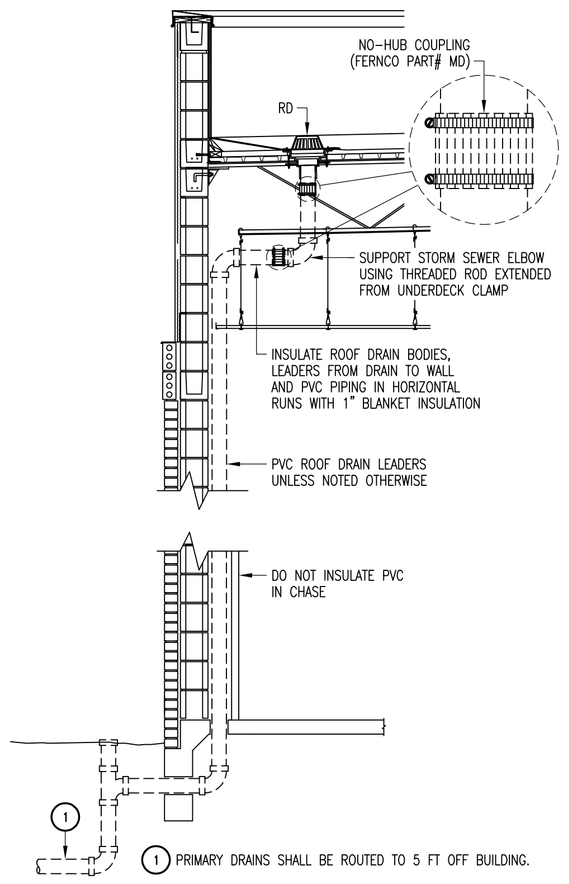

18 ROOF DRAIN SECTION
SCALE: NTS

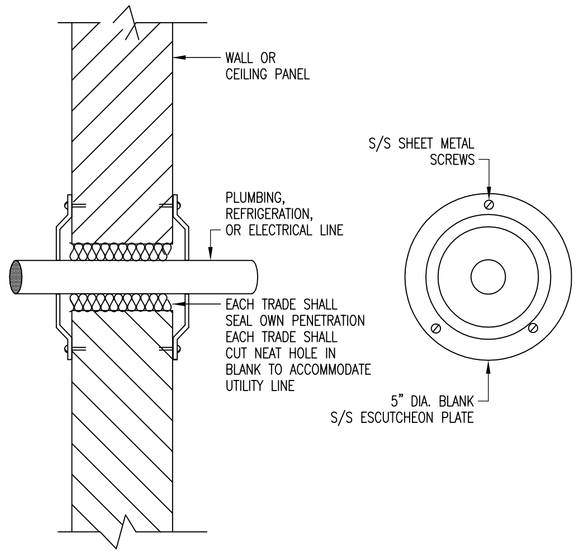

21 ESCUTCHEON AND PENETRATION DTL
SCALE: N.T.S.

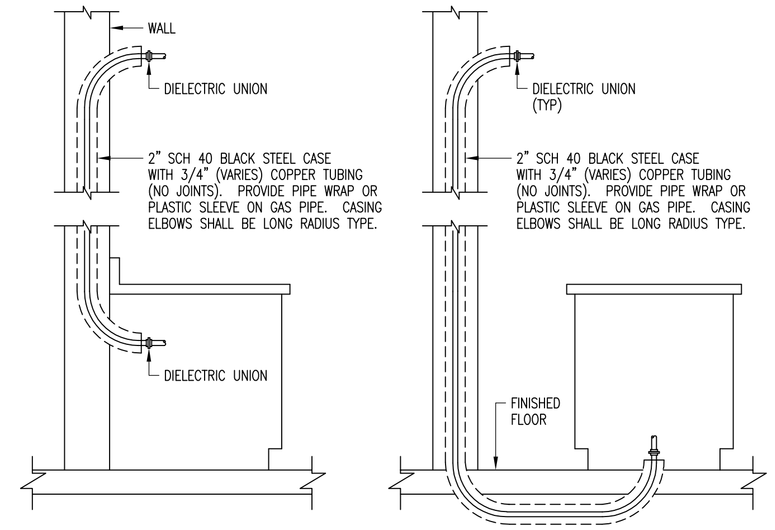

25 GAS PIPE SLEEVE IN WALL AND FLOOR
SCALE: N.T.S.

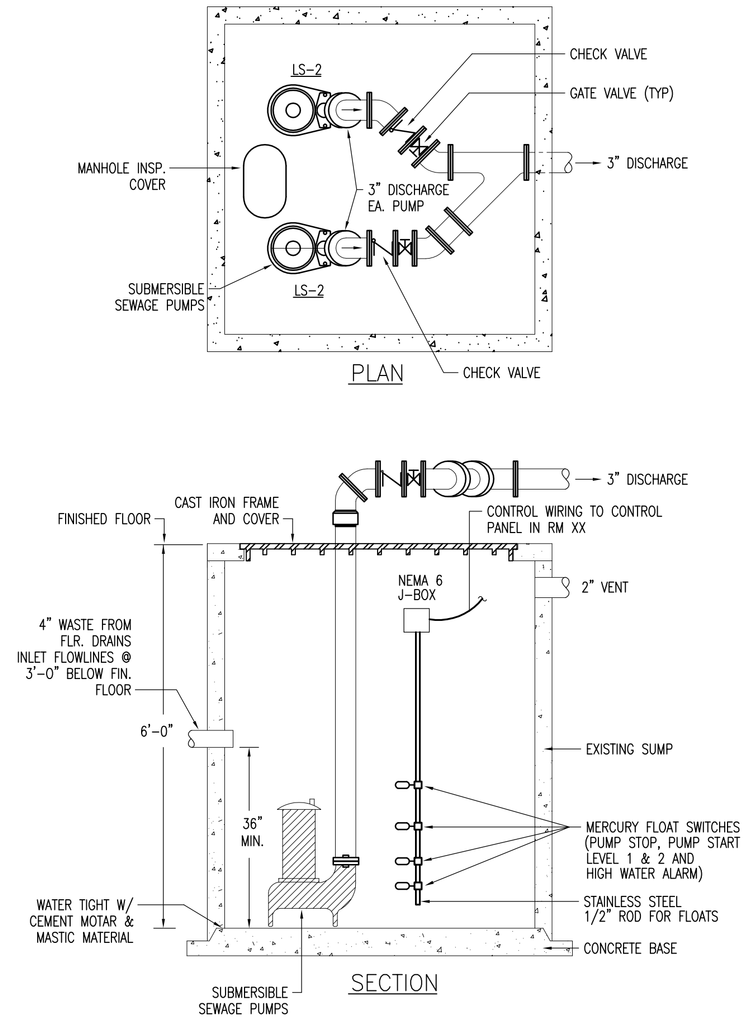

28 STORM EJECTOR DETAIL
SCALE: N.T.S.

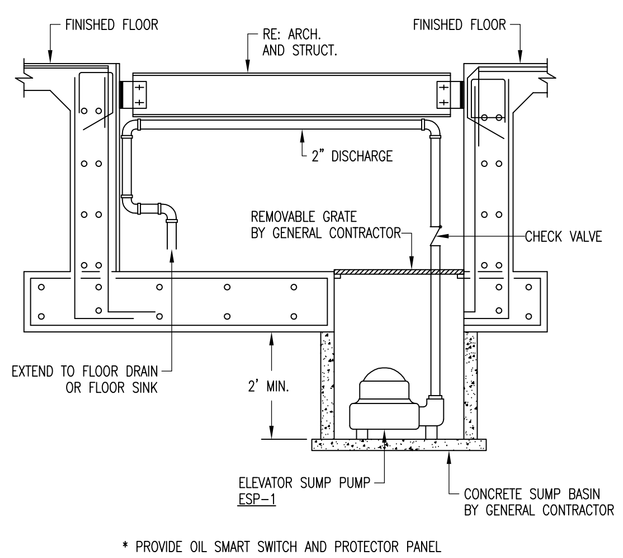

19 SUMP PUMP AT ELEVATOR SHAFT DTL
SCALE: N.T.S.

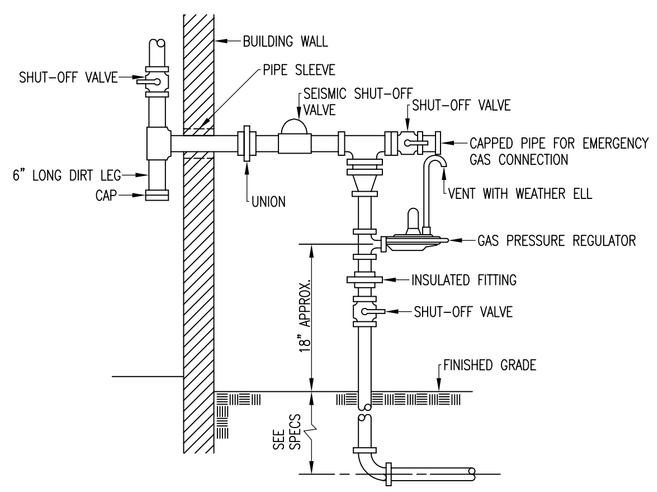

22 GAS PRESSURE REGULATOR
SCALE: N.T.S.

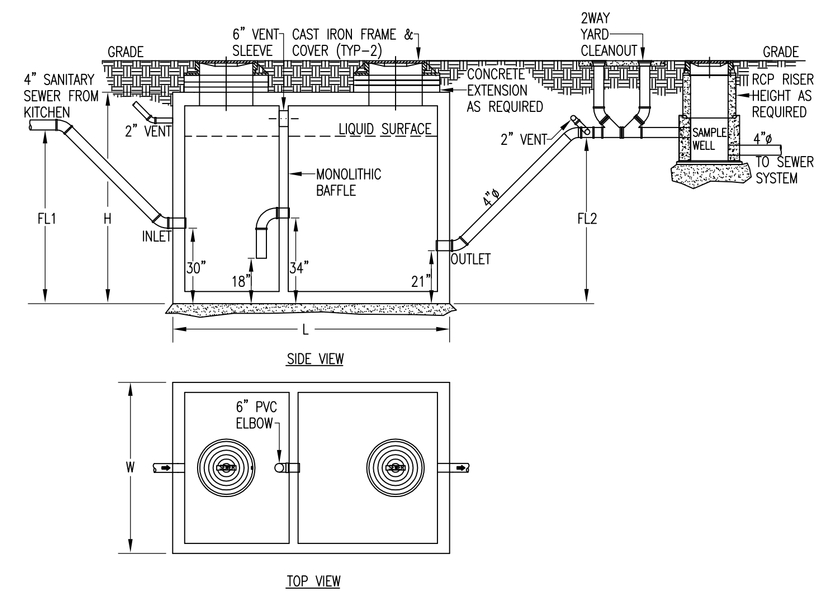

GREASE INTERCEPTOR SCHEDULE								
PARK MODEL NO.	CAPACITY USGal	GREASE CAP. (LBS)	EMPTY WT (LBS)	LENGTH L	WIDTH W	HEIGHT H	INLET FL1	OUTLET FL2
GT-2000	2,000	4,600	24,000	13'-0"	7'-0"	6'-0"	4'-9"	4'-6"

26 GREASE INTERCEPTOR WITH SAMPLE WELL
SCALE: N.T.S.

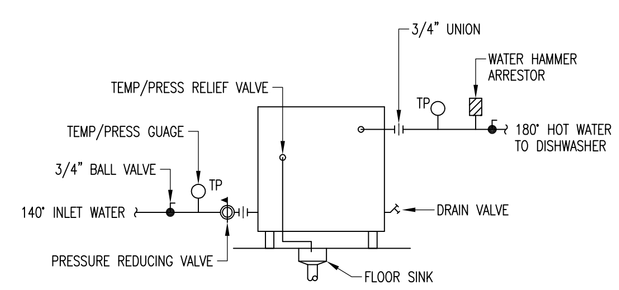

23 BOOSTER HEATER DTL
SCALE: N.T.S.

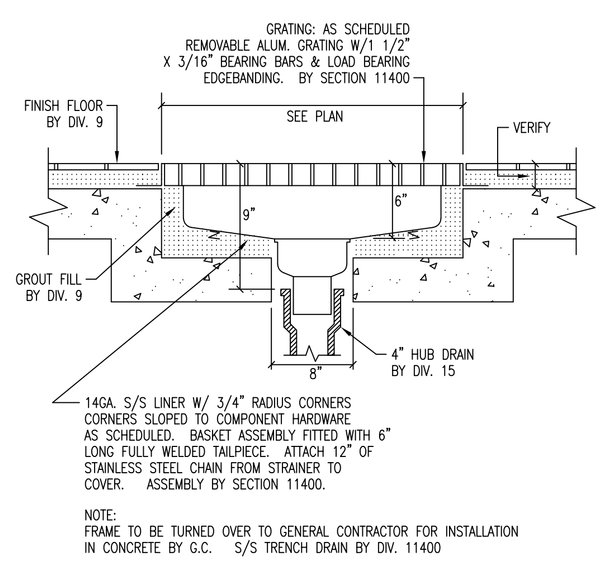

20 TRENCH DRAIN SECTION
SCALE: N.T.S.

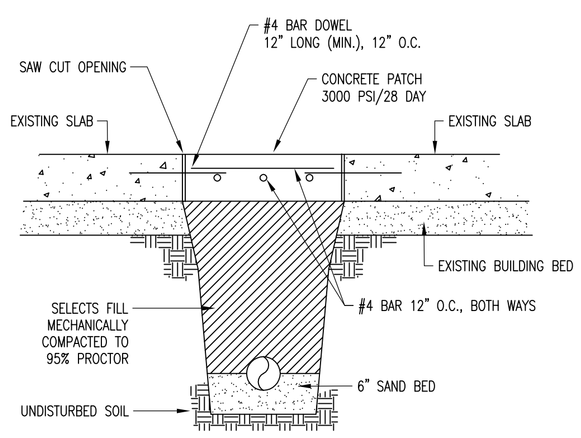

24 SAW CUT DETAIL
SCALE: N.T.S.

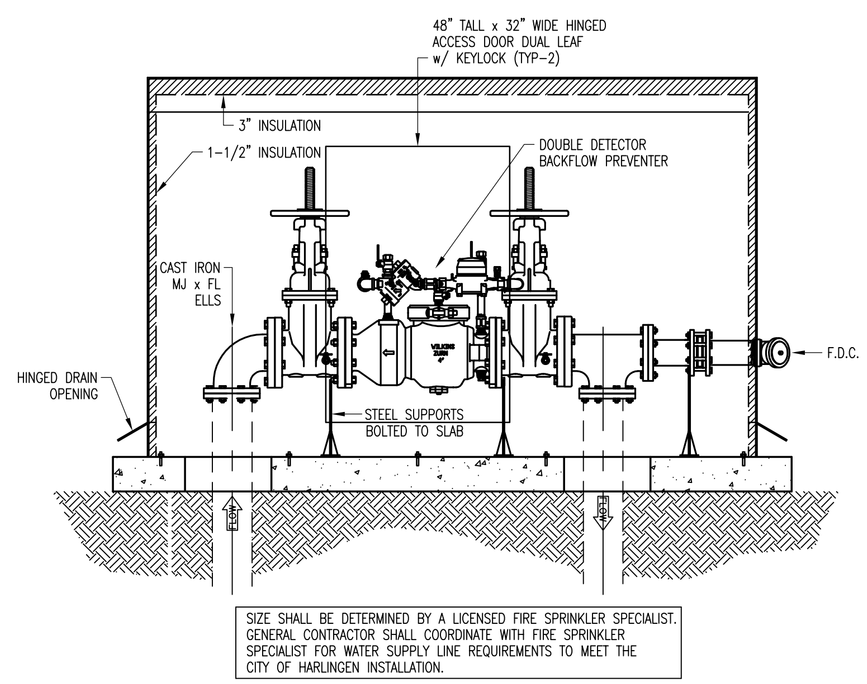

27 DOUBLE DETECTOR BACKFLOW PREVENTER w/FDC & ENCLOSURE
SCALE: N.T.S.

HALFF
5000 WEST MILITARY, SUITE 100
McALLEN, TEXAS 78503
TEL (956) 664-0286
FAX (956) 664-0282
Halff Associates firm registration number is 312

100% PRICING SET

REVISIONS

The Reese
Phase I
202 S. 1st. Street
Harlingen, TX

PLUMBING DETAILS

MEGAMORPHOSIS
• ARCHITECTURE & INTERIOR DESIGN
1409 N. STUART PLACE RD., SUITE D
PHONE #(956) 425-1779 FAX # (956) 425-5886

PROJECT # 27074
MAR. 26, 2010
P-4.4

GENERAL NOTES:

A. FOR A LIST OF GENERAL PLUMBING NOTES; REFER TO PLUMBING SCHEDULES AND NOTES DRAWING, SHEET P-5.4

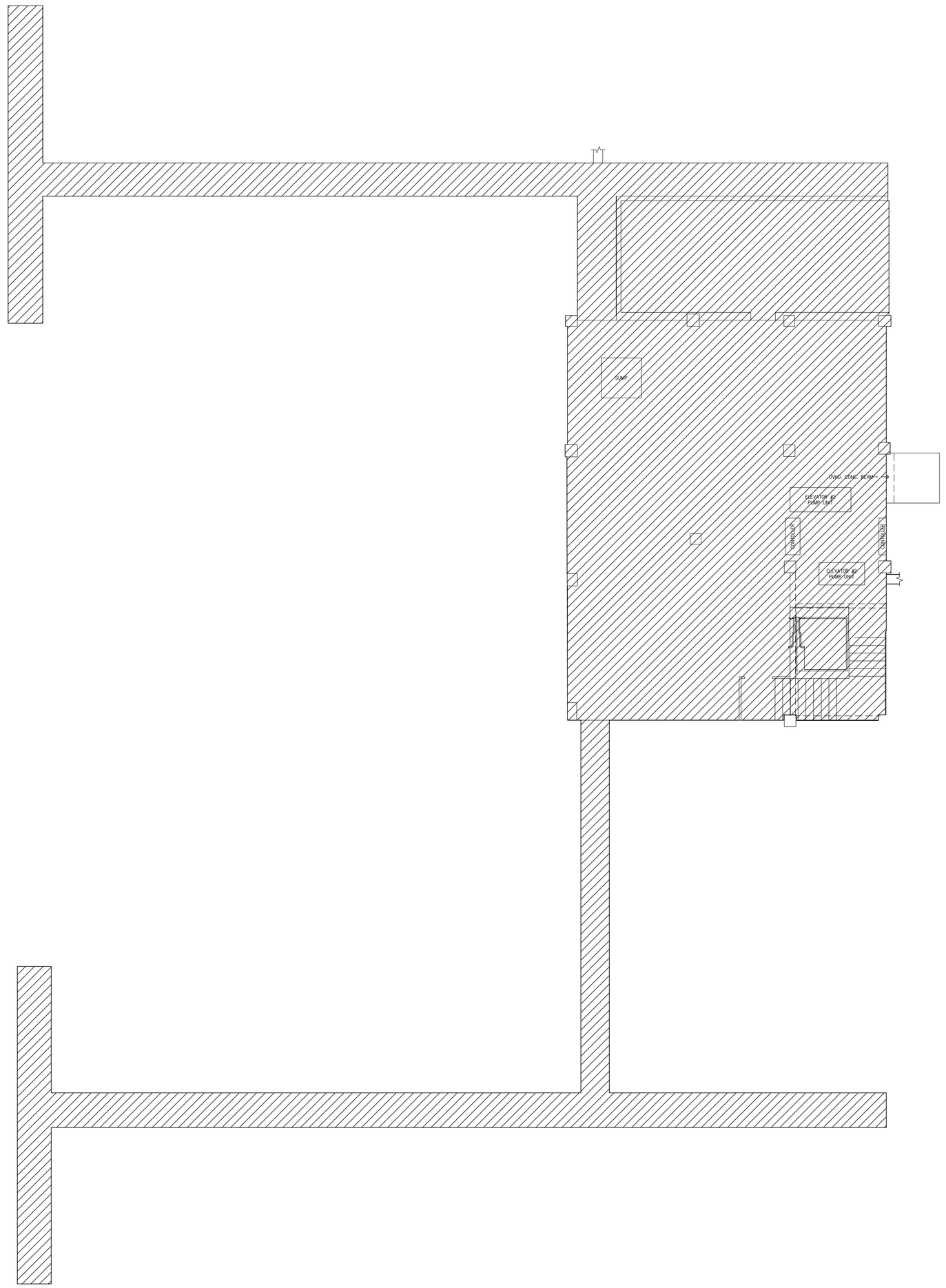

THE EXACT ROUTING OF PIPING AND PLACEMENT OF SPRINKLER HEADS SHALL BE COORDINATED WITH ARCHITECT. THIS BUILDING INCLUDES INTRICATE CEILING CONFIGURATIONS THAT WILL NECESSITATE APPROVAL OF EACH AND EVERY PIPE RUN AND SPRINKLER HEAD. THIS CONTRACTOR SHALL DESIGN THE FIRE SPRINKLER SYSTEM USING GUIDELINES ESTABLISHED BY THE ARCHITECT. OBTAIN APPROVAL FROM THE ARCHITECT FOR EACH FIRE SPRINKLER HEAD IN EACH ROOM WITHIN THE BUILDING. THE GUIDELINES ESTABLISHED BY THE ARCHITECT SHALL IN NO WAY DIMINISH THE RESPONSIBILITY OF THE CONTRACTOR TO PROVIDE A FULLY DESIGNED, SIZED, WORKING AND APPROVED AUTOMATIC FIRE SPRINKLER SYSTEM AS REQUIRED BY THE CONTRACT DRAWINGS, PROJECT MANUAL/SPECIFICATIONS, THE CITY OF HARLINGEN AND THE LAWS OF THE STATE OF TEXAS. PROVIDE A COMPLETE, WORKING AND APPROVED SYSTEM.

THIS BUILDINGS SHALL BE SPRINKLED BY A WET PIPE AUTOMATIC SPRINKLER SYSTEM. CONTRACTOR SHALL INSTALL THE AUTOMATIC FIRE EXTINGUISHING SYSTEM, THE DETECTION SYSTEM, THE FIRE ALARM SYSTEM AND THE PORTABLE EXTINGUISHING SYSTEM, AS REQUIRED FOR LIFE SAFETY IN ACCORDANCE WITH APPLICABLE CODE REQUIREMENTS AND PROJECT PERFORMANCE SPECIFICATIONS. REFER TO ARCHITECTURAL PLANS FOR PROJECT AREAS INFORMATION.

THESE CONCEPTUAL FIRE SPRINKLER PROTECTION PLANS ARE FOR INFORMATION PURPOSES ONLY. ALL CIVIL AND FIRE SPRINKLER PLANS ARE TO BE SUBMITTED SEPARATELY TO THE FIRE DEPARTMENT FOR REVIEW OF COMPLIANCE TO THE RESPECTIVE GOVERNING STANDARDS. (HARLINGEN, TEXAS)

LEGEND

ORDINARY HAZARD GROUP 2
FOR STORAGE ROOMS, MECHANICAL ROOM, LARGE STACK ROOM AREAS OF THE LIBRARY (IF ANY).
DESIGN DENSITY IS 0.20 GPM/SQ.FT.
250 GPM HOSE ALLOWANCE
DESIGN AREA=1500 SQ. FT.

01 CONCEPTUAL FIRE SPRINKLER PLAN – BASEMENT
SCALE: 1/8" = 1'-0"

HALFF
5000 WEST MILITARY, SUITE 100
McALLEN, TEXAS 78503
TEL (956) 664-0286
FAX (956) 664-0282
Halff Associates firm registration number is 312

100% PRICING SET

REVISIONS

The Reese
Phase I
202 S. 1st. Street
Harlingen, TX

CONCEPTUAL FIRE SPRINKLER PLAN

MEGAMORPHOSIS
ARCHITECTURE & INTERIOR DESIGN
1409 N. STUART PLACE RD., SUITE D
PHONE #(956) 428-1779 FAX # (956) 425-5886

PROJECT # 27074
MAR. 26, 2010
P-5.0

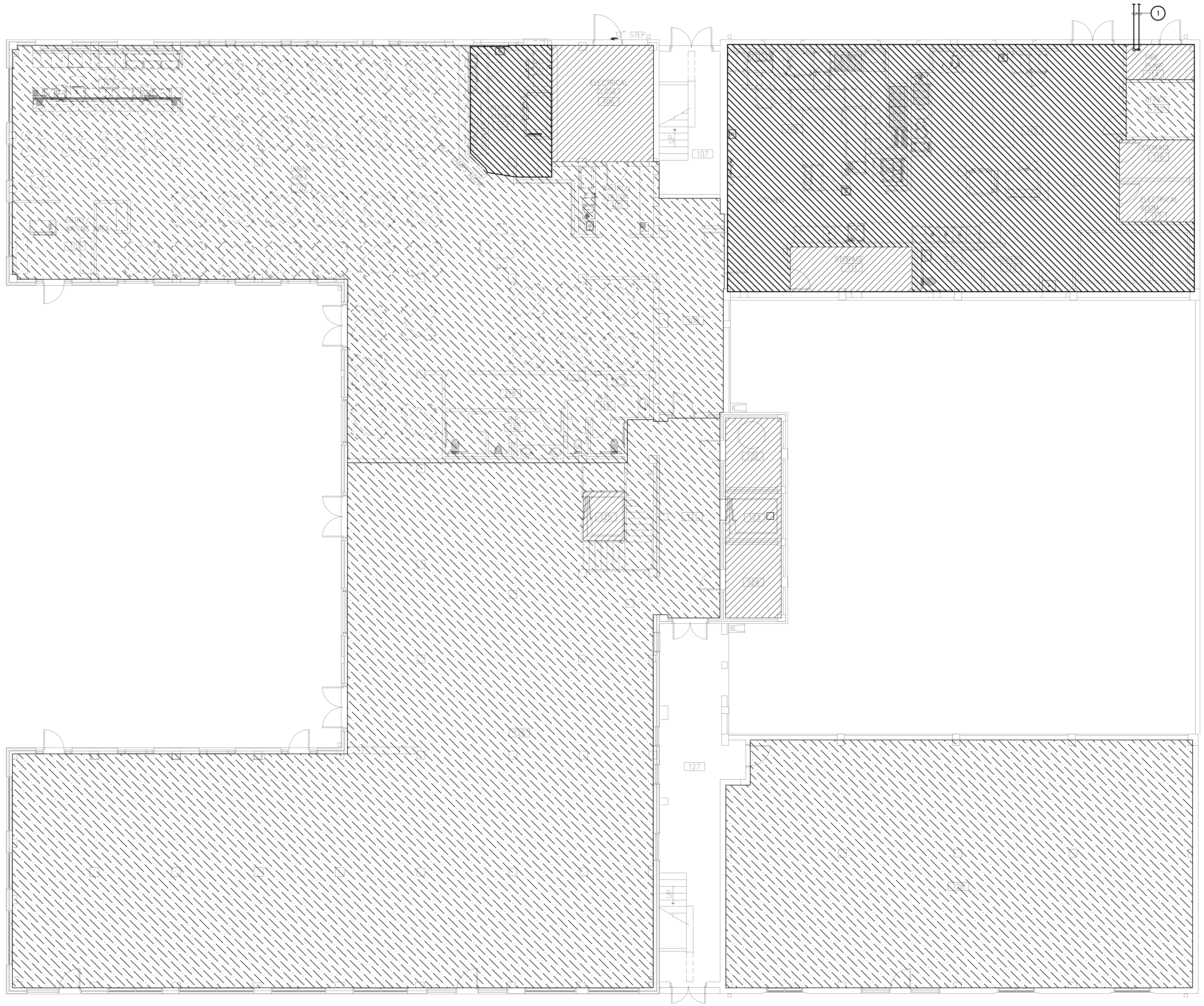

01 CONCEPTUAL FIRE SPRINKLER PLAN – FIRST FLOOR

SCALE: 1/8" = 1'-0"

GENERAL NOTES:

A. FOR A LIST OF GENERAL PLUMBING NOTES; REFER TO PLUMBING SCHEDULES AND NOTES DRAWING, SHEET P-4.2

KEY NOTES:○

1. PROPOSED FIRE SPRINKLER SUPPLY LINES, REFER TO PLUMBING PLAN FOR CONTINUATION OF PIPING AND FDC LOCATION. SIZE SHALL BE DETERMINED BY A LICENSED FIRE SPRINKLER SPECIALIST. GENERAL CONTRACTOR SHALL COORDINATE WITH FIRE SPRINKLER SPECIALIST FOR WATER SUPPLY LINE REQUIREMENTS TO MEET THE CITY OF HARLINGEN INSTALLATION.

THE EXACT ROUTING OF PIPING AND PLACEMENT OF SPRINKLER HEADS SHALL BE COORDINATED WITH ARCHITECT. THIS BUILDING INCLUDES INTRICATE CEILING CONFIGURATIONS THAT WILL NECESSITATE APPROVAL OF EACH AND EVERY PIPE RUN AND SPRINKLER HEAD. THIS CONTRACTOR SHALL DESIGN THE FIRE SPRINKLER SYSTEM USING GUIDELINES ESTABLISHED BY THE ARCHITECT. OBTAIN APPROVAL FROM THE ARCHITECT FOR EACH FIRE SPRINKLER HEAD IN EACH ROOM WITHIN THE BUILDING. THE GUIDELINES ESTABLISHED BY THE ARCHITECT SHALL IN NO WAY DIMINISH THE RESPONSIBILITY OF THE CONTRACTOR TO PROVIDE A FULLY DESIGNED, SIZED, WORKING AND APPROVED AUTOMATIC FIRE SPRINKLER SYSTEM AS REQUIRED BY THE CONTRACT DRAWINGS, PROJECT MANUAL/SPECIFICATIONS, THE CITY OF HARLINGEN AND THE LAWS OF THE STATE OF TEXAS. PROVIDE A COMPLETE, WORKING AND APPROVED SYSTEM.

THIS BUILDINGS SHALL BE SPRINKLED BY A WET PIPE AUTOMATIC SPRINKLER SYSTEM. CONTRACTOR SHALL INSTALL THE AUTOMATIC FIRE EXTINGUISHING SYSTEM, THE DETECTION SYSTEM, THE FIRE ALARM SYSTEM AND THE PORTABLE EXTINGUISHING SYSTEM, AS REQUIRED FOR LIFE SAFETY IN ACCORDANCE WITH APPLICABLE CODE REQUIREMENTS AND PROJECT PERFORMANCE SPECIFICATIONS. REFER TO ARCHITECTURAL PLANS FOR PROJECT AREAS INFORMATION.

THESE CONCEPTUAL FIRE SPRINKLER PROTECTION PLANS ARE FOR INFORMATION PURPOSES ONLY. ALL CIVIL AND FIRE SPRINKLER PLANS ARE TO BE SUBMITTED SEPARATELY TO THE FIRE DEPARTMENT FOR REVIEW OF COMPLIANCE TO THE RESPECTIVE GOVERNING STANDARDS. (HARLINGEN, TEXAS)

LEGEND

ORDINARY HAZARD GROUP 2
FOR STORAGE ROOMS, MECHANICAL ROOM, LARGE STACK ROOM AREAS OF THE LIBRARY (IF ANY).
DESIGN DENSITY IS 0.20 GPM/SQ.FT.
250 GPM HOSE ALLOWANCE
DESIGN AREA=1500 SQ. FT.

LIGHT HAZARD
FOR CLASS ROOMS, OFFICES, CORRIDORS, GYMNASIUM, CAFETERIA, AUDITORIUM (EXCEPT STORAGE AREA), LIBRARY (EXCEPT LARGE STACK ROOM AREAS).
DESIGN DENSITY IS 0.10 GPM/SQ.FT.
100 GPM HOSE ALLOWANCE
DESIGN AREA=1500 SQ. FT.

ORDINARY HAZARD GROUP 1
FOR KITCHEN AREA AND LAUNDRY
DESIGN DENSITY IS 0.15 GPM/SQ.FT.
250 GPM HOSE ALLOWANCE
DESIGN AREA=1500 SQ. FT.

HALFF
5000 WEST MILITARY, SUITE 100
McALLEN, TEXAS 78503
TEL (956) 664-0286
FAX (956) 664-0282
Halff Associates firm registration number is 312

100% PRICING SET

REVISIONS

The Reese
Phase I
202 S. 1st. Street Harlingen, TX

CONCEPTUAL FIRE SPRINKLER PLAN

MEGAMORPHOSIS
· ARCHITECTURE & INTERIOR DESIGN
1409 N. STUART PLACE RD., SUITE D
PHONE #(956) 428-1779 FAX # (956) 425-5886

PROJECT # 27074
MAR. 26, 2010
P-5.1

GENERAL NOTES:

A. FOR A LIST OF GENERAL PLUMBING NOTES; REFER TO PLUMBING SCHEDULES AND NOTES DRAWING, SHEET XXXX

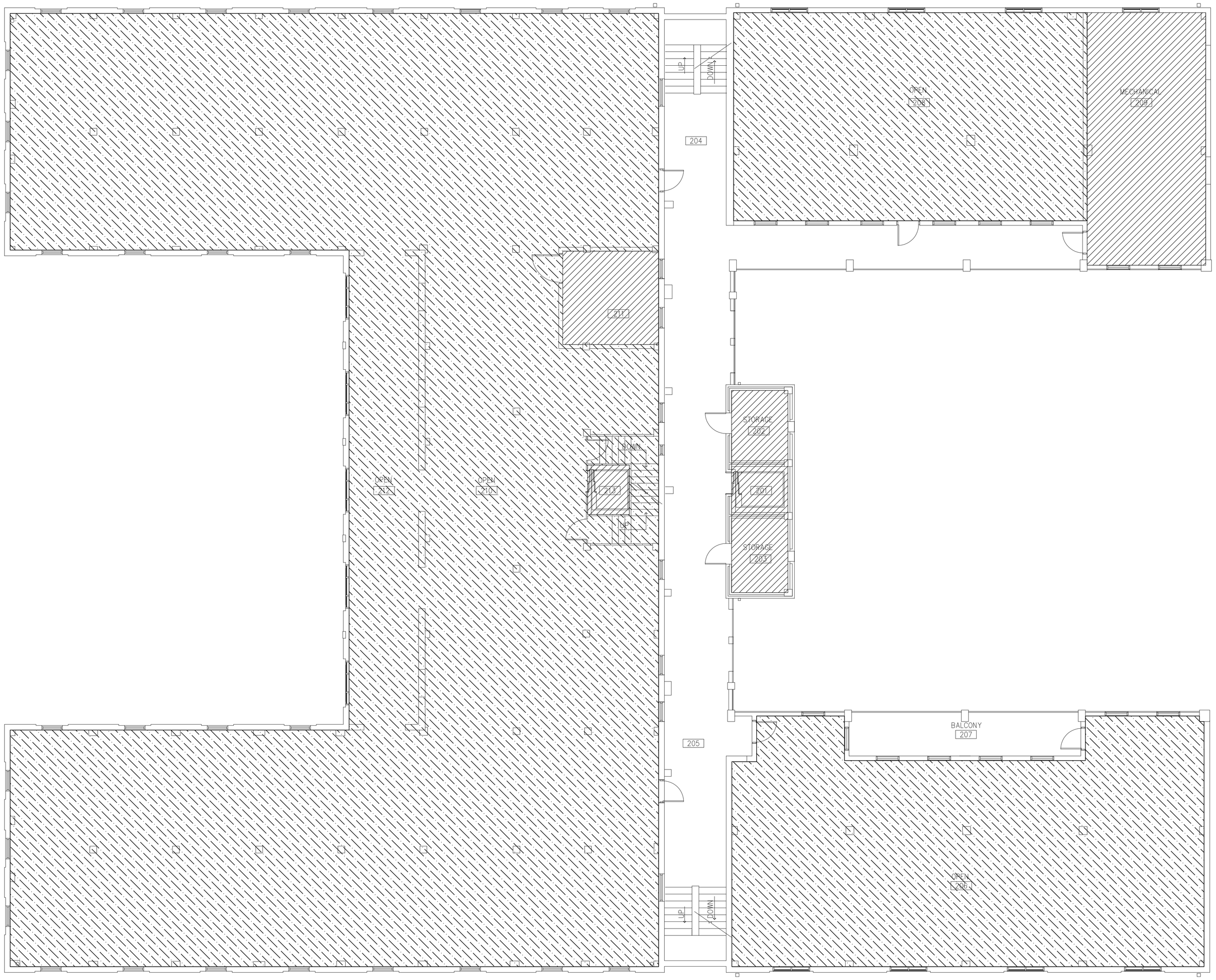

THE EXACT ROUTING OF PIPING AND PLACEMENT OF SPRINKLER HEADS SHALL BE COORDINATED WITH ARCHITECT. THIS BUILDING INCLUDES INTRICATE CEILING CONFIGURATIONS THAT WILL NECESSITATE APPROVAL OF EACH AND EVERY PIPE RUN AND SPRINKLER HEAD. THIS CONTRACTOR SHALL DESIGN THE FIRE SPRINKLER SYSTEM USING GUIDELINES ESTABLISHED BY THE ARCHITECT. OBTAIN APPROVAL FROM THE ARCHITECT FOR EACH FIRE SPRINKLER HEAD IN EACH ROOM WITHIN THE BUILDING. THE GUIDELINES ESTABLISHED BY THE ARCHITECT SHALL IN NO WAY DIMINISH THE RESPONSIBILITY OF THE CONTRACTOR TO PROVIDE A FULLY DESIGNED, SIZED, WORKING AND APPROVED AUTOMATIC FIRE SPRINKLER SYSTEM AS REQUIRED BY THE CONTRACT DRAWINGS, PROJECT MANUAL/SPECIFICATIONS, THE CITY OF HARLINGEN AND THE LAWS OF THE STATE OF TEXAS. PROVIDE A COMPLETE, WORKING AND APPROVED SYSTEM.

THIS BUILDINGS SHALL BE SPRINKLED BY A WET PIPE AUTOMATIC SPRINKLER SYSTEM. CONTRACTOR SHALL INSTALL THE AUTOMATIC FIRE EXTINGUISHING SYSTEM, THE DETECTION SYSTEM, THE FIRE ALARM SYSTEM AND THE PORTABLE EXTINGUISHING SYSTEM, AS REQUIRED FOR LIFE SAFETY IN ACCORDANCE WITH APPLICABLE CODE REQUIREMENTS AND PROJECT PERFORMANCE SPECIFICATIONS. REFER TO ARCHITECTURAL PLANS FOR PROJECT AREAS INFORMATION.

THESE CONCEPTUAL FIRE SPRINKLER PROTECTION PLANS ARE FOR INFORMATION PURPOSES ONLY. ALL CIVIL AND FIRE SPRINKLER PLANS ARE TO BE SUBMITTED SEPARATELY TO THE FIRE DEPARTMENT FOR REVIEW OF COMPLIANCE TO THE RESPECTIVE GOVERNING STANDARDS. (HARLINGEN, TEXAS)

LEGEND

ORDINARY HAZARD GROUP 2
FOR STORAGE ROOMS, MECHANICAL ROOM, LARGE STACK ROOM AREAS OF THE LIBRARY (IF ANY).
DESIGN DENSITY IS 0.20 GPM/SQ.FT.
250 GPM HOSE ALLOWANCE
DESIGN AREA=1500 SQ. FT.

LIGHT HAZARD
FOR CLASS ROOMS, OFFICES, CORRIDORS, GYMNASIUM, CAFETERIA, AUDITORIUM (EXCEPT STORAGE AREA), LIBRARY (EXCEPT LARGE STACK ROOM AREAS).
DESIGN DENSITY IS 0.10 GPM/SQ.FT.
100 GPM HOSE ALLOWANCE
DESIGN AREA=1500 SQ. FT.

01 CONCEPTUAL FIRE SPRINKLER PLAN – SECOND FLOOR
SCALE: 1/8" = 1'-0"

N

HALFF
5000 WEST MILITARY, SUITE 100
McALLEN, TEXAS 78503
TEL (956) 664-0286
FAX (956) 664-0282
Halff Associates firm registration number is 312

100% PRICING SET

REVISIONS

The Reese
Phase I
202 S. 1st. Street
Harlingen, TX

CONCEPTUAL FIRE SPRINKLER PLAN

MEGAMORPHOSIS
- ARCHITECTURE & INTERIOR DESIGN
1409 N. STUART PLACE RD., SUITE D
PHONE #(956) 428-1779 FAX # (956) 425-5886

PROJECT # 27074
MAR. 26, 2010
P-5.2

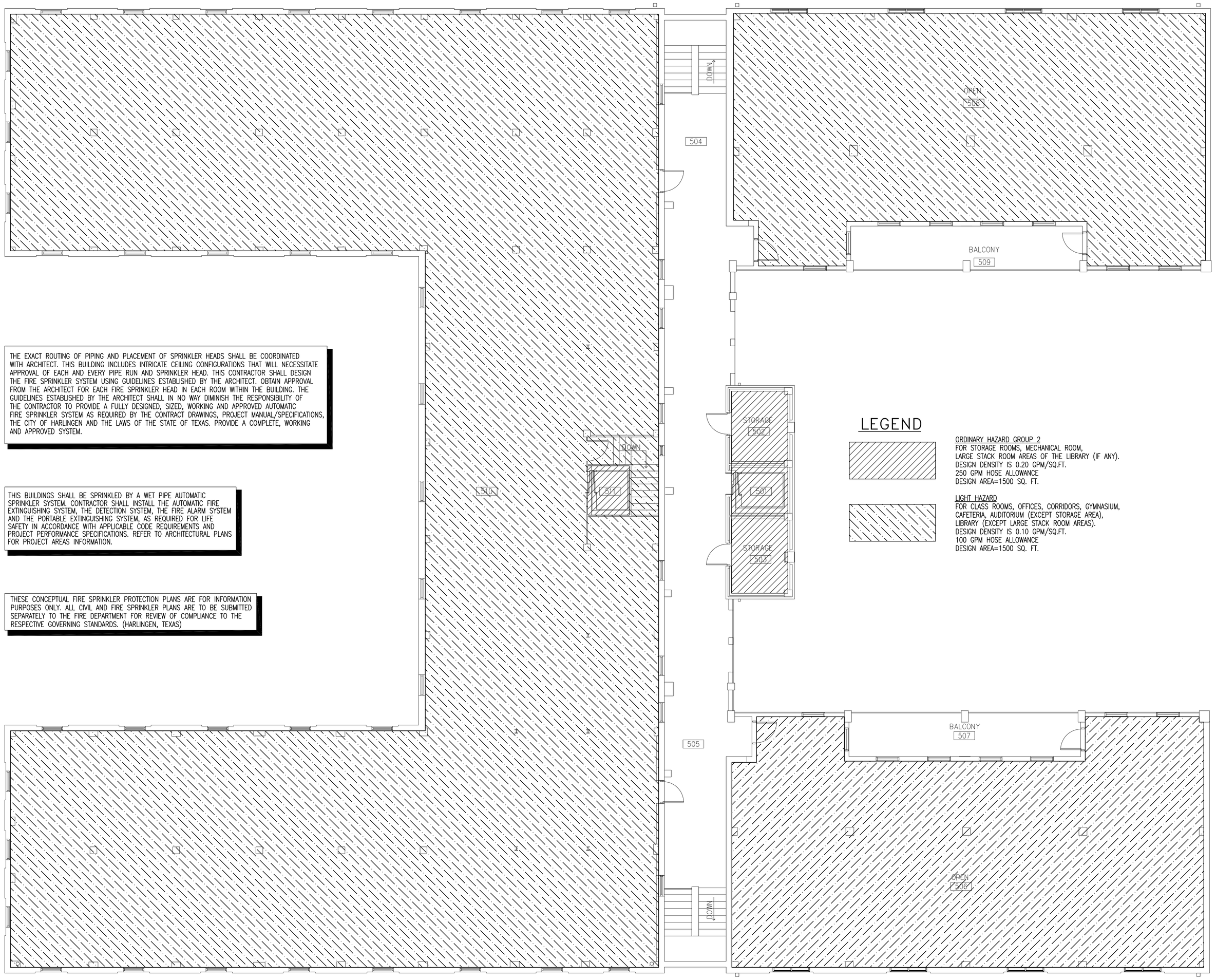

THE EXACT ROUTING OF PIPING AND PLACEMENT OF SPRINKLER HEADS SHALL BE COORDINATED WITH ARCHITECT. THIS BUILDING INCLUDES INTRICATE CEILING CONFIGURATIONS THAT WILL NECESSITATE APPROVAL OF EACH AND EVERY PIPE RUN AND SPRINKLER HEAD. THIS CONTRACTOR SHALL DESIGN THE FIRE SPRINKLER SYSTEM USING GUIDELINES ESTABLISHED BY THE ARCHITECT. OBTAIN APPROVAL FROM THE ARCHITECT FOR EACH FIRE SPRINKLER HEAD IN EACH ROOM WITHIN THE BUILDING. THE GUIDELINES ESTABLISHED BY THE ARCHITECT SHALL IN NO WAY DIMINISH THE RESPONSIBILITY OF THE CONTRACTOR TO PROVIDE A FULLY DESIGNED, SIZED, WORKING AND APPROVED AUTOMATIC FIRE SPRINKLER SYSTEM AS REQUIRED BY THE CONTRACT DRAWINGS, PROJECT MANUAL/SPECIFICATIONS, THE CITY OF HARLINGEN AND THE LAWS OF THE STATE OF TEXAS. PROVIDE A COMPLETE, WORKING AND APPROVED SYSTEM.

THIS BUILDINGS SHALL BE SPRINKLED BY A WET PIPE AUTOMATIC SPRINKLER SYSTEM. CONTRACTOR SHALL INSTALL THE AUTOMATIC FIRE EXTINGUISHING SYSTEM, THE DETECTION SYSTEM, THE FIRE ALARM SYSTEM AND THE PORTABLE EXTINGUISHING SYSTEM, AS REQUIRED FOR LIFE SAFETY IN ACCORDANCE WITH APPLICABLE CODE REQUIREMENTS AND PROJECT PERFORMANCE SPECIFICATIONS. REFER TO ARCHITECTURAL PLANS FOR PROJECT AREAS INFORMATION.

THESE CONCEPTUAL FIRE SPRINKLER PROTECTION PLANS ARE FOR INFORMATION PURPOSES ONLY. ALL CIVIL AND FIRE SPRINKLER PLANS ARE TO BE SUBMITTED SEPARATELY TO THE FIRE DEPARTMENT FOR REVIEW OF COMPLIANCE TO THE RESPECTIVE GOVERNING STANDARDS. (HARLINGEN, TEXAS)

LEGEND

ORDINARY HAZARD GROUP 2
FOR STORAGE ROOMS, MECHANICAL ROOM, LARGE STACK ROOM AREAS OF THE LIBRARY (IF ANY).
DESIGN DENSITY IS 0.20 GPM/SQ.FT.
250 GPM HOSE ALLOWANCE
DESIGN AREA=1500 SQ. FT.

LIGHT HAZARD
FOR CLASS ROOMS, OFFICES, CORRIDORS, GYMNASIUM, CAFETERIA, AUDITORIUM (EXCEPT STORAGE AREA), LIBRARY (EXCEPT LARGE STACK ROOM AREAS).
DESIGN DENSITY IS 0.10 GPM/SQ.FT.
100 GPM HOSE ALLOWANCE
DESIGN AREA=1500 SQ. FT.

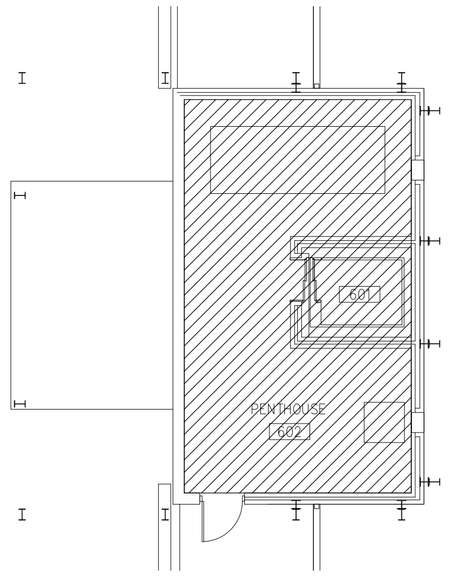

N 02 CONCEPTUAL FS PLAN PENTHOUSE
SCALE: 1/8" = 1'-0"

N 01 CONCEPTUAL FIRE SPRINKLER PLAN – THIRD THRU FIFTH FLOORS
SCALE: 1/8" = 1'-0"

100% PRICING SET

HALFF
5000 WEST MILITARY, SUITE 100
McALLEN, TEXAS 78503
TEL (956) 664-0286
FAX (956) 664-0282
Halff Associates firm registration number is 312

REVISIONS

The Reese
Phase I
202 S. 1st. Street
Harlingen, TX

CONCEPTUAL FIRE SPRINKLER PLAN

MEGAMORPHOSIS
• ARCHITECTURE & INTERIOR DESIGN
1409 N. STUART PLACE RD., SUITE D
PHONE #(956) 428-1779 FAX # (956) 425-5886

PROJECT # 27074
MAR. 26, 2010
P-5.3

AUTOMATIC SPRINKLER SYSTEM PERFORMANCE SPECIFICATION NOTES:

PART 1 – GENERAL

1.01 SCOPE:

A. FURNISH ALL LABOR, MATERIALS, TOOLS, EQUIPMENT AND RELATED ITEMS REQUIRED FOR THE COMPLETE DESIGN AND INSTALLATION OF AUTOMATIC SPRINKLER SYSTEM.

B. ALL AREAS OF THE BUILDING SHALL BE PROTECTED BY WET AUTOMATIC FIRE SPRINKLERS.THE SYSTEM SHALL BE HYDRAULICALLY CALCULATED. DENSITY SHALL BE IN ACCORDANCE WITH NFPA–13, NFPA 24 AND NFPA 231.

C. THE FIRE SPRINKLER CONTRACTOR SHALL OBTAIN A FLOW TEST, FROM THE CITY, PERFORMED WITHIN THE LAST 12 MONTHS TO VERIFY ADEQUATE WATER SUPPLY FOR THE FIRE SPRINKLER SYSTEM PRIOR TO BIDDING.

D. FIRE SPRINKLER CONTRACTOR SHALL FIELD VERIFY ALL EXISTING CONDITIONS PRIOR TO DESIGNING AND INSTALLING SYSTEM.

E. WATER SUPPLY SHALL COME FROM A NEW FIRE LINE SERVICE COMPLETE WITH. DOUBLE CHECK BACKFLOW PREVENTER, AND VALVING AS REQUIRED BY THE CITY. THE FIRE SPRINKLER CONTRACTOR SHALL PAY ALL TAP FEES, PERMITS, AND CHARGES NECESSARY FOR A COMPLETE AND APPROVED INSTALLATION.

1.02 QUALITY ASSURANCE:

A. SPRINKLER SYSTEM SHALL COMPLY WITH ALL APPLICABLE STATE AND CITY CODES, NFPA REQUIREMENTS, AND OWNER'S INSURANCE COMPANY REQUIREMENTS; INCLUDING, BUT NOT LIMITED TO THE FOLLOWING:

1. UNIFORM BUILDING CODE.
2. NFPA CHAPTER 13,24 & 231.
3. LIFE SAFETY CODE NFPA–101.
4. OWNER'S INSURANCE UNDERWRITER REQUIREMENTS.
5. UNIFORM FIRE CODE.

1.03 SUBMITTALS:

A. PREPARE DETAILED WORKING DRAWINGS OF THE AUTOMATIC SPRINKLER SYSTEM.

B. SUBMIT DRAWINGS AND CALCULATIONS TO FIRE MARSHAL, AND OWNER'S INSURANCE UNDERWRITER AND OBTAIN THEIR APPROVAL.

C. SUBMIT FOUR (4) COPIES OF APPROVED DRAWINGS AND CALCULATIONS TO THE ARCHITECT AND TWO (2) COPIES TO THE FIRE MARSHALL FOR THEIR REVIEW AND APPROVAL.

D. SUBMIT "CUTSHEET" SAMPLES OF SPRINKLER HEADS TO ARCHITECT FOR APPROVAL.

PART 2 – PRODUCTS

2.01 GENERAL:

A. ALL MATERIALS, EQUIPMENT, VALVES AND DEVICES INSTALLED OR FURNISHED UNDER THIS CONTRACT SHALL BE UNDERWRITERS LABORATORIES (UL) LISTED AND FACTORY MUTUAL (FM) APPROVED FOR USE BY THE AUTHORITIES, AGENCIES, CODES AND STANDARDS CITED IN THIS SECTION OF THE SPECIFICATIONS.

2.02 PIPING:

A. SPRINKLER PIPING SMALLER THAN 4" SHALL BE SCHEDULE 40 (ASTM SPECIFICATIONS A–120 OR A–53) BLACK STEEL PIPE WHICH SHALL BE ASSEMBLED WITH 175 PSIG STANDARD CAST IRON, THREADED FITTINGS OR WITH FLANGED SPRINKLER TYPE FITTINGS OR GROOVED FITTINGS AS REQUIRED. PIPING 4" AND LARGER MAY BE UL APPROVED STEEL PIPE WITH GROOVED OR WELDED FITTINGS AS APPROVED BY THE LOCAL AUTHORITIES. GROOVED FITTINGS SHALL BE VICTAULIC OR APPROVED EQUAL, THE GROOVING MACHINE SHALL BE THE SAME AS THAT RECOMMENDED BY THE FITTINGS MANUFACTURER.

B. SCHEDULE 10 (THIN WALL) SPRINKLER PIPING MAY BE USED WHERE APPROVED BY THE AUTHORITIES.

C. PIPING FROM 5'–0" OUTSIDE BUILDING TO ALARM CHECK VALVE INSTALLATION SHALL BE DUCTILE IRON PIPING WRAPPED WITH 3 MIL POLYETHYLENE.

2.03 HANGERS:

A. PROVIDE NECESSARY UL APPROVED HANGERS TO SUPPORT THE SPRINKLER PIPINGS. HANGERS SHALL BE SPACED IN ACCORDANCE WITH REQUIREMENTS OF THE NFPA CHAPTER 13.

2.04 SPRINKLERS:

A. SPRINKLER HEADS IN AREAS WITH FINISHED CEILINGS SHALL BE PENDENT SPRAY TYPE, CHROME FINISH WITH CHROME ESCUTCHEON AND SHALL BE EQUAL TO GRINNELL ISSUE 'C' DURASPEED 1/2" ORIFICE AND UL AND FM LISTED.

B. HEADS IN AREAS WITHOUT CEILINGS AND WITH EXPOSED PIPING SHALL BE UPRIGHT TYPE, BRASS FINISH AND SHALL BE EQUAL TO GRINNELL QUICK RESPONSE MODEL "A" 1/2" ORIFICE AND UL AND FM LISTED.

C. HEAD IN VICINITY OF HEATING EQUIPMENT AND ELECTRICAL EQUIPMENT SHALL BE HIGH TEMPERATURE HEADS OF THE TYPE APPROVED BY FM AND UL.

2.05 FIRE DEPARTMENT SIAMESE:

A. REFER TO VAULT DETAIL.

2.06 GATE VALVES:

A. GATE VALVES 2–1/2" AND LARGER SHALL BE UNDERWRITER'S APPROVAL EQUAL TO JENKINS 825A OR CRANE 467.

2.07 CHECK VALVES:

A. ALL CHECK VALVES SHALL BE EQUAL TO JENKINS 729, CRANE 375 OR WALWORTH 883F AND EQUIPPED WITH AN AUTOMATIC BALL DRIP TO DRAIN THE LINE BETWEEN THE FIRE DEPARTMENT CONNECTION AND THE CHECK VALVE.

2.08 FLOW SWITCHES:

A. PROVIDE A GRINNELL SERIES WFD FLOW SWITCH IN EACH SPRINKLER SYSTEM CONNECTION SERVING EACH SPRINKLER ZONE. SWITCHES SHALL BE SUITABLE FOR CONNECTION INTO THE FIRE ALARM SYSTEM.

2.09 MONITOR SWITCHES:

A. EACH MANUAL SECTIONALIZING VALVE AND SHUTOFF VALVE IN THE SPRINKLER SYSTEM SHALL BE PROVIDED WITH A GRINNELL F640 MONITORING SWITCH TO INDICATE WHETHER THE VALVE IS OPEN OR CLOSED. WIRING FROM SWITCHES TO THE FIRE ALARM SYSTEM WILL BE DONE UNDER DIVISION 16. THE SWITCH SHALL HAVE A TAMPER INDICATION IF REMOVED FROM ITS MOUNTING OR THE HOUSING COVER IS REMOVED; IT SHALL SIGNAL AN ALARM WHEN THE VALVE POSITION IS ALTERED.

2.10 ALARM VALVE ASSEMBLIES:

A. THE ALARM VALVE ASSEMBLY SHALL BE EQUAL TO GRINNELL MODEL A–3 CONSISTING OF A SERVICE SHUTOFF VALVE, A CLAPPER TYPE MAIN CHECK VALVE, AN AUXILIARY SEAT (ALARM OUTLET), A RETARDING CHAMBER, AND ELECTRIC CIRCUIT CLOSER, GAUGES, CHECK VALVES, GATE VALVES, GLOBE OR ANGLE VALVES AND COCKS.

2.11 WATER MOTOR GONG:

A. NOT USED

2.12 SPARE SPRINKLERS:

A. PROVIDE A WALL MOUNTED SPRINKLER CABINET WITH A MINIMUM OF 12 SPRINKLERS OF EACH TYPE INSTALLED AND A SPRINKLER WRENCH. MOUNT CABINET NEXT TO SPRINKLER ALARM VALVE.

2.13 WET CHEMICAL FIRE SUPPRESSION SYSTEM:

A. FURNISH AND INSTALL A PRE–ENGINEERED WET CHEMICAL FIRE SUPRESSION SYSTEM AS MANUFACTURED BY WELLS FARGO PYRO TECHNOLOGIES, MODEL KITCHEN KNIGHT, AS REQUIRED BY FIRE MARSHALL AND/OR OWNER'S INSURANCE UNDERWRITER

2.14 DOUBLE CHECK BACKFLOW PREVENTER

A. REFER TO DETAIL.

PART 3 – EXECUTION

3.01 SCOPE:

A. FURNISH AND INSTALL WITH ALL RELATED ITEMS, A COMPLETELY DESIGNED FIRE PROTECTION AUTOMATIC SPRINKLER SYSTEM.

3.02 CERTIFIED CONTRACTORS:

A. FABRICATION AND INSTALLATION SHALL BE BY STATE LICENSED FIRE SPRINKLER COMPANY WITH EXPERIENCED, COMPETENT WORKMEN REGULARLY ENGAGED IN THE WORK.

3.03 COORDINATION:

A. WORK SHALL INCLUDE, BUT NOT NECESSARILY BE LIMITED TO THE FOLLOWING:

1. REQUIRED FITTINGS AND VALVES, ETC.
2. OVERHEAD SPRINKLER SYSTEM FOR ENTIRE BUILDING, INCLUDING ALL REQUIRED ITEMS, EXCEPT UNDER EXTERIOR CANOPIES AND/OR OVERHANGS OVER WALKWAYS.

3.04 DESIGN:

A. PIPING IN AREAS HAVING CEILINGS, OTHER THAN THE UNDERSIDE OF THE ROOF DECK, SHALL BE CONCEALED; PIPING IN STORAGE AND SERVICE AREAS MAY BE EXPOSED BUT KEPT AT A MINIMUM DISTANCE FROM CEILING. ALL PIPING SHALL BE NEW, CLEAN AND FREE FROM RUST.

B. THE SPRINKLER CONTRACTOR SHALL COORDINATE HIS WORK AND SERVICES WITH ALL OTHER CEILING MOUNTED, SUSPENDED OR OVERHEAD EQUIPMENT AND WITH STRUCTURAL SYSTEM. NO SPRINKLER LINES SHALL PASS THROUGH DUCTWORK.

C. DEEP ESCUTCHEONS MAY BE USED IN ORDER TO LOCATE HEADS CLOSE TO LIGHTING FIXTURES. WHERE SPRINKLER HEADS OCCUR UNDER OVERHANGS, ESCUTCHEONS OF LESSER DEPTH MAY BE USED WHERE ACCEPTABLE TO THE CITY FIRE MARSHAL AND NFPA 13.

D. RISERS SHALL BE LOCATED WHERE INDICATED ON THE DRAWINGS AND BE EQUIPPED WITH VARIABLE PRESSURE ALARM VALVES. VALVES SHALL BE COMPLETE WITH ALL NECESSARY ITEMS, FITTINGS, IDENTIFICATION TAGS OR PLATES, AND ACCESSORIES INCLUDING ALARM VALVE AND WATER MOTOR GONG. DESIGN SHALL ALLOW FOR SUITABLE VENTING AND DRAINAGE OF SAME, ALL TO MEET WITH THE APPROVAL OF THE CITY FIRE MARSHAL AND THE OWNER'S INSURANCE UNDERWRITER AND NFPA 13.

DESIGNS REQUIRING CUTTING OF STRUCTURAL MEMBERS FOR PASSAGE OF SPRINKLER PIPE AND HANGER SHALL BE AVOIDED. WHEN DESIGN, DUE TO ECONOMY, APPEARANCE AND SIMILAR ASPECTS, DENOTE THE NECESSITY OF CUTTING, IT SHALL BE HELD TO AN ABSOLUTE MINIMUM AND DONE ONLY WITH THE ARCHITECT'S WRITTEN APPROVAL.

F. IN ADDITION TO MEETING THE NATIONAL FIRE PROTECTION ASSOCIATION NO. 13 REQUIREMENTS, THE FOLLOWING WILL APPLY TO THE SPRINKLER SYSTEM:

1. THE SPRINKLER SYSTEM SHALL BE ELECTRICALLY INTER–CONNECTED TO THE BUILDING FIRE ALARM SYSTEM.
2. THE SPRINKLER SYSTEM MAIN CONTROL VALVE SHALL BE ELECTRICALLY SUPERVISED SO THAT AT LEAST A LOCAL ALARM WILL SOUND WHEN THE VALVE IS CLOSED.

3.05 DRAWINGS:

A. SHOP DRAWINGS CONSISTING OF THE FOLLOWING SHALL BE FURNISHED BY THE SPRINKLER SUB–CONTRACTOR:

1. LAYOUT DRAWING OF COMPLETE OVERHEAD AUTOMATIC SPRINKLER SYSTEM INDICATING RELATIONSHIP OF ALL OTHER OVERHEAD ITEMS INCLUDING LIGHT FIXTURES, LOCATION OF RISERS, PIPING, ETC. SHALL BE AS INCONSPICUOUS AS POSSIBLE, PROVIDE A PLEASING OVERHEAD APPEARANCE, AND STILL FULFILL ALL FUNCTIONAL REQUIREMENTS.
2. SPRINKLER CONTRACTOR SHALL OBTAIN A COPY OF APPROVED CEILING GRID SYSTEM FROM CEILING SUB–CONTRACTOR AND SHALL WORK TO THIS LAYOUT WHEN PREPARING SHOP DRAWINGS AND INSTALLING WORK. CUTTING OF CEILING RUNNERS WILL NOT BE PERMITTED.
3. PILOT PLAN INDICATING LOCATION OF ALL UNDERGROUND CONNECTIONS, CONTROL VALVES, PIPING AND ALL RELATED ITEMS, AND ANY OTHER ITEMS OF DATA DEEMED NECESSARY BY THE CITY FIRE MARSHAL AND NFPA 13.
4. COMPLETE DETAILS AND SECTIONS AS REQUIRED TO CLEARLY DEFINE AND CLARIFY THE DESIGN INDICATED BY THE AFOREMENTIONED LAYOUT AND PILOT PLAN.
5. ALL SHOP DRAWINGS, PRIOR TO BEING SENT TO THE ARCHITECT, MUST BEAR BOTH THE CITY FIRE ENGINEERING DEPT. STAMP OF ACCEPTANCE AND THE OWNER'S INSURANCE UNDERWRITER STAMP OF ACCEPTANCE.

B. FURNISH AND INSTALL, NEXT TO THE SPRINKLER RISER MAIN, A PRINTED SHEET, PROTECTED BY WOOD FRAMED GLASS COVER, GIVING BRIEF INSTRUCTIONS REGARDING CONTROL, EMERGENCY PROCEDURE AND OTHER DATA AS DEEMED NECESSARY BY THE CITY FIRE MARSHAL AND THE OWNER'S INSURANCE UNDERWRITER.

C. UPON COMPLETION OF THE WORK, ACCURATELY MARK ONE COPY OF SHOP DRAWINGS SHOWING LOCATION OF ALL UNDERGROUND FIRE PREVENTION SYSTEM PIPING, VALVES, ETC., AS FINALLY INSTALLED. SHOW LOCATION OF UNDERGROUND PIPING AND VALVES BY DIMENSION. ALSO, GIVE FLOW LINE ELEVATIONS OF UNDERGROUND PIPING FROM STREET MAIN TO BUILDING. UPON COMPLETION OF THE JOB, FURNISH OWNER ONE (1) NEAT LEGIBLE COPY OF "AS BUILT" DRAWINGS.

3.06 INSTALLATION:

A. SLEEVES SHALL BE PROVIDED FOR PIPING PASSING THROUGH CONCRETE SLABS, CONCRETE OR MASONRY WALLS AND PARTITIONS, THROUGH FLOORS, CEILINGS, WALLS, OR PARTITIONS OF OTHER BUILDING MATERIALS. WATERTIGHT SLEEVES CAULKED WITH MASTIC OR LEAD SHALL BE PROVIDED FOR FLOOR SLABS AND WALLS ON OR BELOW GRADE. STANDARD PIPE OR GALVANIZED SHEET METAL SLEEVES SHALL BE INSTALLED IN ABOVE GRADE CONSTRUCTION AS MAY BE REQUIRED. THE SLEEVES SHALL BE OF SUFFICIENT DIAMETER TO PASS PIPE LINES WITH COUPLINGS OR WITH INSULATION OR ANNULAR AREA FOR CAULKING WHERE REQUIRED. ESCUTCHEONS SHALL BE APPROVED FLOOR AND CEILING PLATES MADE OF STEEL OR BRASS, PLAIN OR CHROMIUM PLATE FINISH AND SHALL BE INSTALLED AROUND ALL EXPOSED PIPING PASSING THROUGH A FINISHED FLOOR, WALL OR CEILING. THE PLATES SHALL BE OF SUFFICIENT OUTSIDE DIAMETER TO COVER THE SLEEVE OPENING AND SHALL BE PROVIDED WITH SPRINGS OR SET SCREWS TO INSURE THEM FITTING SNUGLY AROUND THE PIPE.

B. ALL OPENINGS FOR PIPING SHOULD BE ANTICIPATED AND INDICATED ON THE APPROVED AND ACCEPTED SHOP DRAWINGS. ANY ADDITIONAL CUTTING OF OPENINGS MUST HAVE WRITTEN APPROVAL OF THE ARCHITECT.

C. THIS CONTRACTOR WILL NOT USE AIR CONDITIONING DUCT SUPPORTS, AIR DEVICE OUTLETS OR SUPPORTS, PIPING OR SUPPORTS AS A MEANS OF SUPPORT OF ANY MATERIAL, ACCESSORIES OR WORKMEN IN THE INSTALLATION OF THE SYSTEM.

3.07 GUARANTEE:

A. THE ENTIRE INSTALLATION SHALL BE GUARANTEED FOR A PERIOD OF ONE YEAR FROM THE BUILDING ACCEPTANCE DATE.

3.08 TESTS:

A. PRIOR TO CONNECTING TO THE OVERHEAD SPRINKLER PIPING, THE UNDERGROUND MAIN SHALL BE FLUSHED PER THE REQUIREMENTS OF THE NFPA.

B. AFTER COMPLETION OF THE INSTALLATION, THE ENTIRE SYSTEM SHALL BE TESTED FOR ACCEPTANCE BY THE OWNER'S INSURANCE UNDERWRITER.

3.09 ACCEPTANCE:

A. THE OWNER'S INSURANCE UNDERWRITER, AFTER SATISFYING THEMSELVES THAT THE INSTALLATION IS SATISFACTORY IN ALL RESPECTS, WILL ISSUE A LETTER OF FINAL ACCEPTANCE. LETTER SHALL BE ADDRESSED TO THE SPRINKLER COMPANY RESPONSIBLE FOR THE INSTALLATION, PREPARED IN TRIPLICATE AND GIVEN TO THE OWNER.

B. AFTER COMPLETION OF ALL INSTALLATION, TESTS, ETC. AND PRIOR TO THE OPENING DATE THE SPRINKLER CONTRACTOR SHALL INSTRUCT THE OWNER IN THE OPERATION OF THE SPRINKLER SYSTEM. PROVIDE WRITTEN OPERATING INSTRUCTIONS AND MOUNT ON WALL IN A FRAME WITH GLASS FRONT. INCLUDE THE FOLLOWING SO THAT THE OWNER:

1. WILL IMMEDIATELY RECOGNIZE THE MAIN VALVES ARE IN OPEN OR CLOSED POSITION.
2. WILL KNOW HOW TO DRAIN THE SYSTEM.
3. WILL KNOW HOW TO RESET THE ALARM SYSTEM.
4. WILL KNOW NOW TO MAKE COMPLETE WEEKLY INSPECTION.
5. WILL KNOW HOW TO MAINTAIN THE SYSTEM IN ACCORDANCE WITH NFPA NO. 13.

3.10 PROTECTION DURING CONSTRUCTION:

A. CONTRACTOR SHALL COMPLETE THE AUTOMATIC FIRE SPRINKLER SYSTEM READY FOR OPERATION, IN ALL RESPECTS, AS SOON AS POSSIBLE. WHEN THE SYSTEM IS COMPLETE AND READY FOR CONTINUOUS OPERATION, ACTIVATE THE SYSTEM FOR ITS INTENDED USE.

FIRE PROTECTION NOTES:

1. CONTRACTOR SHALL INSTALL AN AUTOMATIC SPRINKLER SYSTEM FOR THE BUILDING IN ACCORDANCE WITH NFPA 13. "INSTALLATION OF SPRINKLER SYSTEM" AS DESIGNED BY A LICENSED FIRE PROTECTION SPECIALIST, AND AS APPROVED BY THE **CITY OF HARLINGEN, TX. FIRE MARSHALL AND THE OWNER'S INSURANCE UNDERWRITER.**
2. ALL SPRINKLERS LOCATED IN LIGHT HAZARD AND ORDINARY HAZARD GROUP 1 AREA SHALL BE "STANDARD ORIFICE TYPE" WITH 1/2 INCH DIAMETER NOMINAL ORIFICE SIZE, AND ALL SPRINKLERS LOCATED IN ORDINARY HAZARD GROUP 2 AREA SHALL BE "LARGE ORIFICE TYPE" WITH 17/32 INCH DIAMETER NOMINAL ORIFICE SIZE OR OTHER FM APPROVED AND UL LISTED SPRINKLERS AS APPROVED FOR THE PROPOSED APPLICATION.
3. CONTRACTOR SHALL INSTALL 10 POUND DRY CHEMICAL PORTABLE FIRE EXTINGUISHERS AND FIRE EXTINGUISHER CABINETS IN ACCORDANCE WITH NFPA 10. UNLESS OTHERWISE INDICATED BY THE CITY FIRE MARSHAL.
4. CONTRACTOR SHALL INSTALL A FIRE ALARM SYSTEM REQUIRED FOR LIFE SAFETY IN ACCORDANCE WITH NFPA 70, NFPA 72. FACTORY MUTUAL ENGINEERING DESIGN CRITERIA, UNIFORM FIRE CODE, CITY APPLICABLE BUILDING CODE, TEXAS ACCESSIBILITY STANDARDS, AND THE AMERICAN WITH DISABILITIES ACT REQUIREMENTS. CONTRACTOR SHALL SUBMIT FOR ENGINEER'S APPROVAL THE PROPOSED FIRE ALARM SYSTEM DESIGN AND PRODUCT INFORMATION, AS PREPARED BY A REGISTERED QUALIFIED FIRE ALARM SPECIALIST.
5. CONTRACTOR SHALL SUBMIT FOR ENGINEER'S REVIEW AND APPROVAL (BEFORE COMMENCEMENT OF WORK) A PROPOSED FIRE PROTECTION SPRINKLER SYSTEM PREPARED BY A LICENSED AND REGISTERED FIRE SPRINKLER SYSTEM PROFESSIONAL, THE SUBMITTAL SHALL INCLUDE, BUT NOT LIMITED TO THE FOLLOWING ELEMENTS:
   A) CONSTRUCTION DRAWINGS OF THE PROPOSED FIRE PROTECTION SYSTEM. INCLUDING: PIPE LAYOUT, ALARM VALVE, DRAIN VALVES, TEST VALVES, ETC., AND THE CENTERLINE ELEVATIONS OF THE BRANCH LINES, CROSS MAINS AND FEED MAINS.
   B) CONTRACTOR'S WORK PLAN AND SCHEDULING.
   C) METHODS AND MATERIALS OF CONSTRUCTION. THE LICENSED PROFESSIONAL MUST BE KNOWLEDGEABLE WITH AND IN COMPLIANCE WITH ALL APPROPRIATE UL LISTINGS AND FACTORY MUTUAL REQUIREMENTS. SYSTEM DESIGN, MATERIAL, FABRICATION AND INSTALLATION SHALL MEET MOST CURRENT EDITION OF NFPA 13, UNIFORM FIRE CODE, AND FACTORY MUTUAL DESIGN AND INSTALLATION REQUIREMENTS AND SHALL BE SUBMITTED FOR APPROVAL BY CITY FIRE MARSHAL, STATE AND THE OWNER'S INSURANCE UNDERWRITER.
6. 3" AND LARGER PIPING SHALL BE BLACK CARBON STEEL SCH–40 ASTM A53 WITH CUT GROOVED FITTINGS. 2 1/2" AND SMALLER PIPING SHALL BE BLACK CARBON STEEL SCH–40 ASTM A53 WITH THREADED CLASS 125 FITTINGS. ALL PIPE HANGERS SHALL BE BLACK CARBON STEEL. PIPING, FITTINGS AND PIPE HANGERS BE AS MANUFACTURED BY VICTAULIC, ITT GRINNEL, GRUVLOK OR APPROVED EQUAL. OR OTHER FM APPROVED AND UL LISTED PIPING AS APPROVED FOR THE PROPOSED APPLICATION.
7. ALL PIPE HANGER MATERIAL TO BE BLACK IRON.
8. NEW PIPING TO BE HYDROSTATIC ALLY TESTED AT 210 PSI FOR A MINIMUM 2 HOURS, TEST TO BE WITNESSED BY OWNER'S REPRESENTATIVE.
9. CONTRACTOR SHALL INSTALL FIRE PROTECTION SYSTEM PLUMB AND STRAIGHT WITH BUILDING VERTICAL AND HORIZONTAL.
10. ALL VALVES SUCH AS INSPECTOR TEST VALVES TO BE LOCATED AT LEAST 6' FROM FLOOR. INSPECTOR TEST VALVES SHALL BE INSTALLED AS PER NFPA 13 REQUIREMENTS.
11. CONTRACTOR SHALL PLACE THE SPRINKLER HEADS IN THE CENTERS OF THE CEILING TILES, AND SHALL ALIGN SPRINKLER HEADS.
12. CONTRACTOR SHALL INSTALL HIGH END TEST STATIONS AND LOW END DRAINS AS REQUIRED BY NFPA 13.
13. CONTRACTOR SHALL INSTALL ALL SPRINKLER PIPES AND FITTINGS LEVEL, SO THAT THE SYSTEM CAN BE DRAINED, TRAPPED PIPING SHALL BE DRAINED THROUGH AUXILIARY DRAINS. THESE AUXILIARY DRAINS SHALL BE INSTALLED AT THE LOCATIONS WHERE A CHANGE IN PIPING DIRECTION PREVENTS DRAINAGE OF THE SYSTEM PIPING THROUGH THE MAIN DRAIN VALVE.
14. IN THE KITCHEN AREA, THE CONTRACTOR SHALL INSTALL A WET CHEMICAL FIRE SUPPRESSION SYSTEM. THIS SYSTEM SHALL BE INSTALLED FOR PROTECTION OF THE KITCHEN HOODS, PLENUMS, EXHAUST DUCTS, GREASE FILTERS, AND COOKING APPLIANCES (SUCH AS FRYERS, GRIDDLES, RANGETOPS, UPRIGHT BROILERS, CHARBROILERS, AND WOKS) FROM GREASE FIRES.
15. IN THE FREEZER AND COOLER AREAS, THE CONTRACTOR SHALL INSTALL LISTED DRY PENDENT SPRINKLERS TO BE USED ON WET PIPE SPRINKLER SYSTEMS.

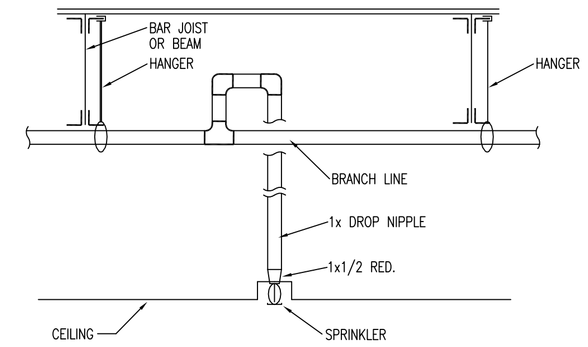

01 TYPICAL PENDENT SPRINKLER DETAIL
SCALE: N.T.S.

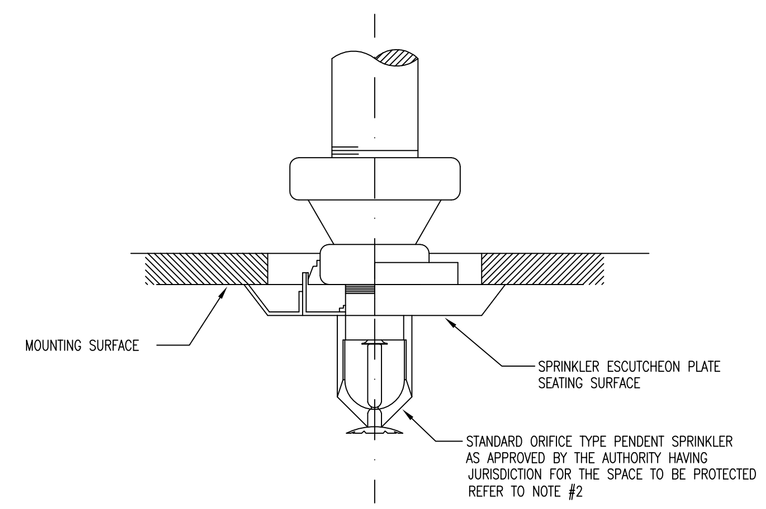

02 TWO–PIECE (ADJUSTABLE) FLUSH ESCUTCHEON PLATE
SCALE: N.T.S.

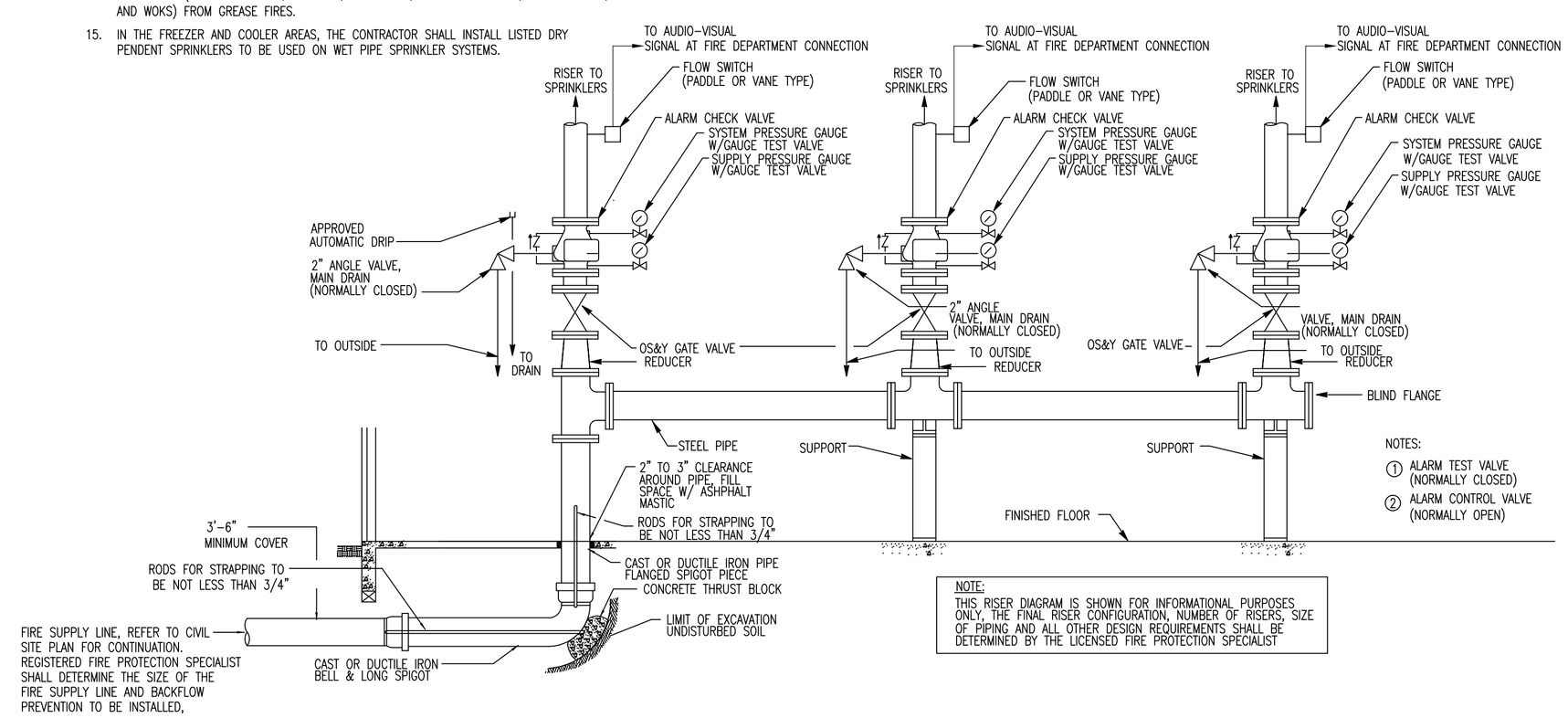

NOTE:
THIS RISER DIAGRAM IS SHOWN FOR INFORMATIONAL PURPOSES ONLY. THE FINAL RISER CONFIGURATION, NUMBER OF RISERS, SIZE OF PIPING AND ALL OTHER DESIGN REQUIREMENTS SHALL BE DETERMINED BY THE LICENSED FIRE PROTECTION SPECIALIST

03 WET PIPE RISER DETAIL
SCALE: N.T.S.

THESE CONCEPTUAL FIRE SPRINKLER PROTECTION PLANS ARE FOR INFORMATION PURPOSES ONLY. ALL CIVIL AND FIRE SPRINKLER PLANS ARE TO BE SUBMITTED SEPARATELY TO THE FIRE DEPARTMENT FOR REVIEW OF COMPLIANCE TO THE RESPECTIVE GOVERNING STANDARDS. (HARLINGEN, TEXAS)

HALFF
5000 WEST MILITARY, SUITE 100
McALLEN, TEXAS 78503
TEL (956) 664-0286
FAX (956) 664-0282
Halff Associates firm registration number is 312

100% PRICING SET

REVISIONS

The Reese
Phase I
202 S. 1st. Street
Harlingen, TX

CONCEPTUAL FIRE
SPRINKLER PLAN

MEGAMORPHOSIS
• ARCHITECTURE & INTERIOR DESIGN
1409 N. STUART PLACE RD., SUITE D
PHONE #(956) 428-1779 FAX # (956) 425-5886

PROJECT #
27074
MAR. 26, 2010
P-5.4

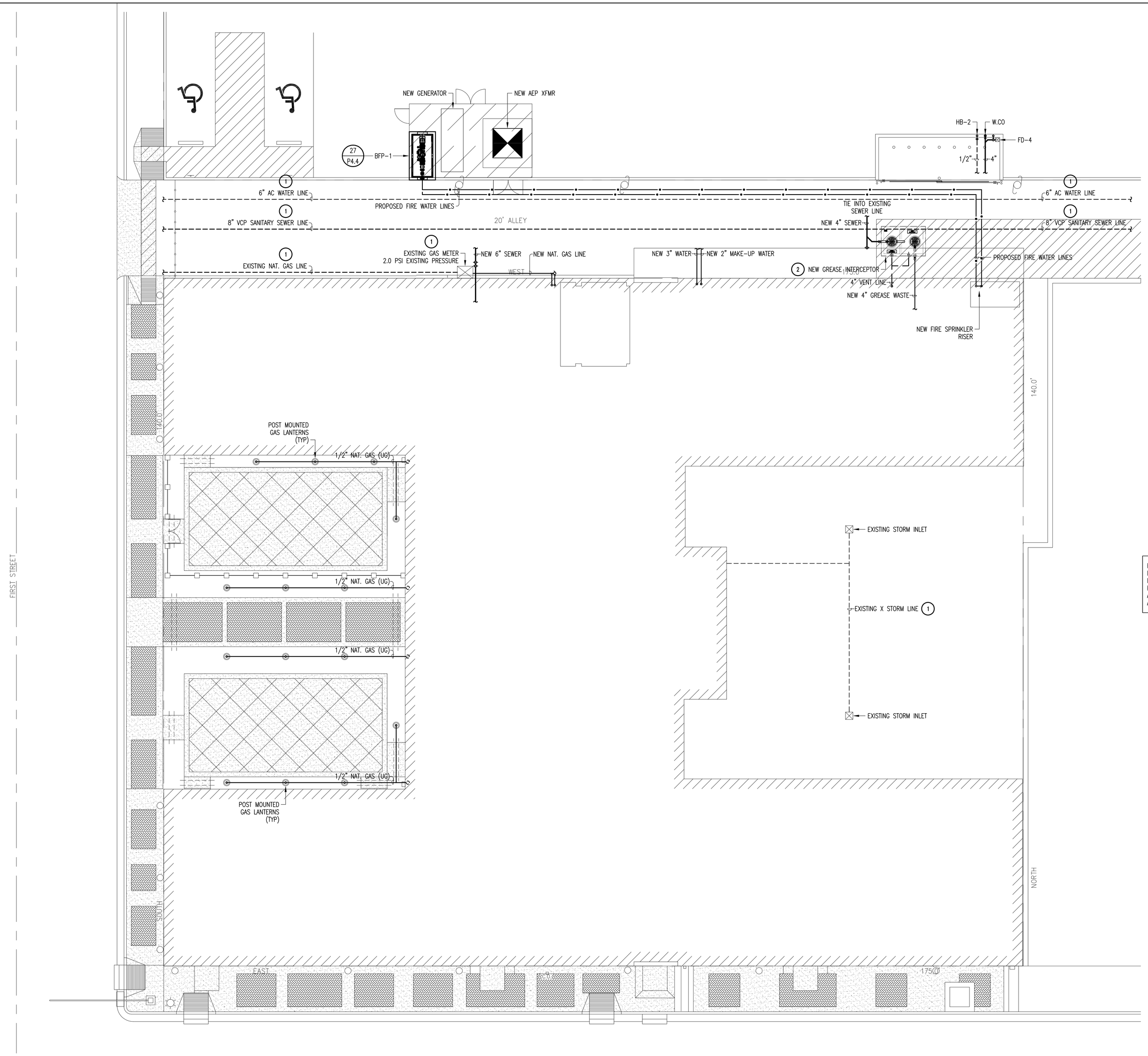

GENERAL NOTES:

A. FOR A LIST OF GENERAL PLUMBING NOTES; REFER TO PLUMBING SCHEDULES AND NOTES DRAWING, SHEET P-4.2

KEY NOTES:

1. LOCATIONS SHOWN FOR EXISTING PIPING ARE APPROXIMATE. CONTRACTOR SHALL FIELD VERIFY LOCATION, SIZE, AND DEPTH OF PIPING. IF EXISTING PIPING IS AT LOCATIONS OTHER THAN THAT SHOWN, IT SHALL BE CONTRACTORS RESPONSIBILITY TO MAKE NECESSARY ADJUSTMENTS AND ROUGH-INS AND TO PROVIDE SERVICE AND CONNECTIONS REQUIRED.
2. VERIFY LOCATION AND DEPTH OF EXISTING UNDERGROUND UTILITIES PRIOR TO INSTALLING GREASE INTERCEPTOR.

LEGEND

- EXISTING WATER LINE
- EXISTING NAT. GAS LINE
- EXISTING SANITARY SEWER LINE
- EXISTING STORM SEWER LINE

PLUMBING CONTRACTOR SHALL COORDINATE DOMESTIC WATER AND SANITARY SEWER LINES DIRECTION OF FLOW, SIZE AND POINT OF CONNECTION WITH CIVIL PLANS PRIOR TO INSTALLATION OF ROUGH-IN TO AVOID CONFLICT. ANY DISCREPANCIES FOUND BY THE PLUMBING CONTRACTOR SHALL BE REPORTED TO THE ENGINEER/ARCHITECT IMMEDIATELY AND PRIOR TO ANY INSTALLATION. FAILURE TO COMPLY SHALL MAKE ALL CORRECTIONS AND/OR MODIFICATIONS THE FULL RESPONSIBILITY OF THE CONTRACTOR.

INFORMATION ON THIS SHEET HAS BEEN TAKEN FROM RECORD DRAWINGS AND SITE SURVEY. CONTRACTOR SHALL FIELD VERIFY ALL EXISTING CONDITIONS BEFORE COMMENCING WORK AND REPORT ANY AND ALL DISCREPANCIES BETWEEN ACTUAL CONDITIONS AND THESE PLANS TO THE ENGINEER/ARCHITECT IMMEDIATELY.

01 PLUMBING SITE PLAN

SCALE: 1"=10'-0"

HALFF
5000 WEST MILITARY, SUITE 100
McALLEN, TEXAS 78503
TEL (956) 664-0286
FAX (956) 664-0282
Halff Associates firm registration number is 312

100% PRICING SET

REVISIONS

The Reese
Phase I
202 S. 1st. Street
Harlingen, TX

PLUMBING SITE PLAN

MEGAMORPHOSIS
·ARCHITECTURE & INTERIOR DESIGN
1409 N. STUART PLACE RD., SUITE D
PHONE #(956) 428-1779 FAX # (956) 425-5886

PROJECT # 27074

MAR. 26, 2010

PS-1.0